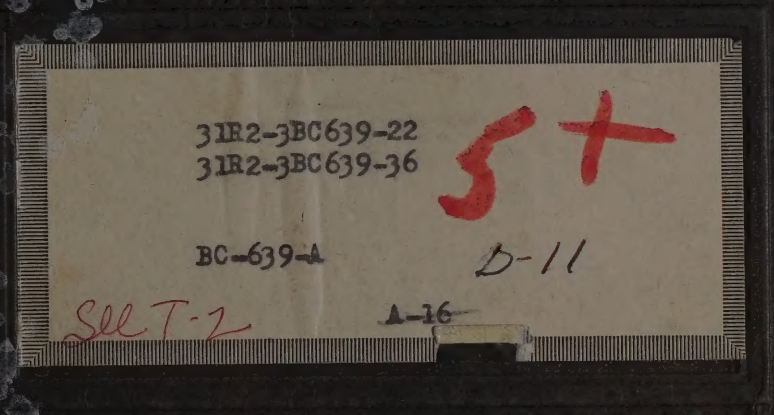
31R2-3BC639-22
31R2-3BC639-36
5+
BC-639-A
D-11
See T-2
A-16

T. O. 31R2-3BC639-36

HANDBOOK
PREVENTIVE MAINTENANCE INSTRUCTIONS

RADIO RECEIVER
BC-639-( )

REVISION NOTICE

LATEST REVISED PAGES SUPERSEDE THE SAME PAGES OF PREVIOUS DATE

Insert revised pages into basic publication. Destroy superseded pages.

PUBLISHED UNDER AUTHORITY OF THE SECRETARY OF THE AIR FORCE

Air Force, Vicks Litho & Prtg. Corp., Yorkville, N.Y., 10-16-59—700 Reprint

15 SEPTEMBER 1955

REVISED 6 DECEMBER 1957

Reproduction for non-military use of the information or illustrations contained in this publication is not permitted without specific approval of the issuing service (BuAer or USAF). The policy for use of Classified Publications is established for the Air Force in AFR 205-1 and for the Navy in Navy Regulations, Article 1509.

LIST OF REVISED PAGES ISSUED

INSERT LATEST REVISED PAGES. DESTROY SUPERSEDED PAGES.

NOTE: The portion of the text affected by the current revision is indicated by a vertical line in the outer margins of the page.

Page No.	*Date of Latest Revision*
iii	6 December 1957

* The asterisk indicates pages revised, added or deleted by the current revision.

ADDITIONAL COPIES OF THIS PUBLICATION MAY BE OBTAINED AS FOLLOWS:

USAF ACTIVITIES.—In accordance with Technical Order No. 00-5-2.
NAVAL ACTIVITIES.—Use Publications and Forms Order Blank (NavAer 2126) and submit to the nearest publications supply point listed below: NAS, Alameda, Calif.; NAS, Jacksonville, Fla.; NAS, Norfolk, Va.; NAS, San Diego, Calif.; NAS, Seattle, Wash.; NASD, ASO, Guam; NASD, Philadelphia, Pa.
For listing of available publications see Naval Aeronautic Publications Index (NavAer 00-500).

USAF

CONTENTS

Number	Title	Page
1.1(6)	Power Supply	1
1.2(2)	Over-all Receiver Sensitivity	3
1.3(2)	I-F Sensitivity	7
1.4(3)	I-F Selectivity	11-12
1.5(3)	Image-Frequency Rejection	13-14
1.6(16)	Tuning Meter	15
1.7(8)	Receiver Calibration	19
2.1(5)	Operational Check	21
2.2(5)	I-F Amplifier and C-W Oscillator Alignment	23
2.3(5)	Tuning Mechanism Adjustment	27
2.4(5)	Front-End Alignment	29
3.1(1)	Cleaning and Inspection	35
3.2(1)	Lubrication	39-40

INTRODUCTION

1. PURPOSE: This handbook establishes standardized work methods and simplified step-by-step job instructions for the preventive maintenance of Radio Receiver BC-639-A. The individual job instructions, in the form of "Routines," are presented simply and logically to permit their ready use by maintenance personnel. Adequate performance standards are included.

2. SCOPE: These job instructions are applicable to and will be utilized by all activities maintaining the equipment.

3. SPECIAL INSTRUCTIONS: This handbook will be utilized as a portion of the standardized communications electronics maintenance inspection system. Personnel utilizing this handbook shall notify supervisory personnel immediately if satisfactory performance cannot be obtained.

SCHEDULE FOR ACCOMPLISHMENT OF ROUTINES

(Intervals are in days, for example "7" means "every seventh day")

Routine Number	CONTINUOUS OPERATION				TACTICAL OPERATION				STANDBY OPERATION			
	Temperate	Arctic	Tropic	Desert	Temperate	Arctic	Tropic	Desert	Temperate	Arctic	Tropic	Desert
1.1(6)	*	*	*	*	*	*	*	*	*	*	*	*
1.2(2)	60	60	45	45	60	60	45	45	90	90	60	60
1.3(2)	60	60	45	45	60	60	45	45	90	90	60	60
1.4(3)	60	60	45	45	60	60	45	45	90	90	60	60
1.5(3)	60	60	45	45	60	60	45	45	90	90	60	60
1.6(16)	45	45	30	30	60	60	45	45	60	60	45	45
1.7(8)	60	60	45	45	60	60	45	45	90	90	60	60
2.1(5)	*	*	*	*	*	*	*	*	*	*	*	*
2.2(5)	*	*	*	*	*	*	*	*	*	*	*	*
2.3(5)	*	*	*	*	*	*	*	*	*	*	*	*
2.4(5)	*	*	*	*	*	*	*	*	*	*	*	*
3.1(1)	30	30	20	20	30	30	20	20	45	45	30	30
3.2(1)	365	365	180	180	365	365	180	180	365	365	180	180

* Accomplishment to be directed by maintenance supervisor when results of performance tests indicate the need therefor.

PERFORMANCE TEST—POWER SUPPLY

1. GENERAL INFORMATION.

a. The purpose of this routine is to determine whether Rectifier RA-42-B (or RA-42-A) is providing the receiver with the proper operating voltages.

b. The approximate time required for this routine is 25 minutes.

c. Report all measurements that are not within tolerance to the maintenance supervisor for corrective action.

2. TEST EQUIPMENT REQUIRED.

a. Multimeter AN/PSM-6.

3. MATERIALS REQUIRED.

a. Headset.

b. Screwdriver.

4. PROCEDURES.

a. Set POWER ON switch on rectifier unit to off position.

b. Disconnect the following items:

(1) A-C socket connector from rectifier.

(2) Jones connector sockets from receiver and rectifier.

(3) Antenna coaxial connector at rear of receiver.

c. Remove the following items:

(1) Receiver from rack.

(2) Rectifier from rack.

(3) Dust covers from receiver and rectifier.

d. Place receiver and rectifier (upside down) on service bench.

e. Reconnect items (1) and (2) of step b.

f. Insert headset plug into MONITOR receptacle on receiver front panel.

g. Set POWER ON switch on rectifier to on position; allow 10-minute warmup.

h. On multimeter turn FUNCTION switch to ACV-1KΩ/V, and RANGE switch to 250 (volts).

i. Connect one lead from red jack of multimeter to center connection of fuse holder (361-1) of AC SUPPLY FUSES.

j. Connect another lead from black jack of multimeter to center connection of other fuse holder (361-2) of AC SUPPLY FUSES. The multimeter should indicate 115 ±5 volts.

k. Disconnect all meter leads from equipment.

l. Set RANGE switch of multimeter to 10 (volts).

m. Connect one lead from red jack of multimeter to terminal 8 of rectifier Jones plug.

n. Connect another lead from black jack of multimeter to chassis ground. The indication of the multimeter should be 6.2 to 6.4 volts, ac; if not, adjust SUPPLY VOLTAGE control for a reading as near 6.3 volts as possible.

o. Disconnect all meter leads from equipment.

p. On multimeter turn FUNCTION switch to DCV, and RANGE switch to 250 (volts).

q. Connect one lead from red jack of multimeter to terminal 10 (under chassis) of rectifier Jones receptacle.

CAUTION

High voltage is present from terminal 10 to chassis.

r. Connect another lead from black jack of multimeter to chassis ground. The indication on the multimeter should be 205 to 215 volts, dc.

NOTE

On Rectifier RA-42-A the d-c voltage indication can be read directly from the front panel DC VOLTAGE meter.

s. Disconnect all test equipment. If following tests are not to be performed, replace receiver dust cover. Remount receiver in rack, and reconnect the items disconnected in step b. (1) through (3).

PERFORMANCE TEST—OVER-ALL RECEIVER SENSITIVITY

1. GENERAL INFORMATION.

a. The purpose of this routine is to determine whether the over-all receiver sensitivity is normal.

b. The approximate time required for this routine is 45 minutes.

c. Report all measurements that are not within tolerance to the maintenance supervisor for corrective action.

NOTE

Receiver misalignment is often the cause of poor receiver sensitivity and selectivity and of incorrect dial calibration. However, due to the difficulty of adjusting some of the circuits, it is advisable to use other routines to check alignment and receiver calibration further before starting the servicing routines. Realignment of the i-f stages will usually restore the original operating performance of the receiver. Refer to Routines 1.3(2) and 1.7(8).

2. TEST EQUIPMENT REQUIRED.

a. Signal Generator TS-497( )/URR.

b. Multimeter AN/PSM-6.

3. MATERIALS REQUIRED.

a. 600-ohm carbon resistor.

b. Two short test leads with clips.

4. PROCEDURES.

a. Set POWER ON switch on power supply to off position.

b. Disconnect the following:

(1) A-C socket connector from power supply.

(2) Jones connector sockets from receiver and power supply.

(3) Antenna coaxial connector at rear of receiver.

c. Remove the following:

(1) Receiver from rack.

(2) Power supply from rack.

(3) Dust cover from receiver chassis.

d. Reconnect (on service bench) items (1) and (2) disconnected in step b.

e. Plug a-c cord into convenience outlet.

f. Connect 600-ohm resistor across terminals 3 and 5 of receiver output transformer.

g. Connect one lead from red jack of multimeter to terminal 5 of receiver output transformer.

h. Connect another lead from black jack of multimeter to terminal 3 of receiver output transformer.

i. Set FUNCTION switch of multimeter to OUTPUT, and RANGE switch to 5 (volts).

j. Set POWER ON switch of power supply to on position; allow ten-minute warmup.

k. Set receiver front-panel controls as given in table below.

CONTROL	POSITION
MEGACYCLES dial	100 (initially)
ATTENUATION switch	0 DB
R.F. GAIN INCREASE control	Maximum counterclockwise
AUDIO GAIN INCREASE control	Maximum clockwise
C.W. MANUAL-MANUAL-A.V.C. switch	MANUAL
THRESHOLD SENSITIVITY	Adjust for TUNING METER indication of 5 ma. Refer to Routine 1.6(16).

l. Connect signal generator as follows:

(1) Connect impedance-matching pad, supplied with signal generator, to CARRIER OUTPUT jack on signal generator.

(2) Connect one end of cord CG-55B/U, supplied with signal generator, to output jack of impedance-matching pad.

(3) Connect other end of cord CG-55B/U to antenna coupling jack (J200) on rear of receiver.

m. Set signal-generator controls as follows:

(1) Set POWER switch to ON position.

(2) Set range knob to band E.

(3) Adjust tuning until carrier frequency dial is set to 100 mc.

(4) Adjust carrier output attenuator fully counterclockwise.

(5) Set modulation selector control to OFF position.

(6) Adjust ring fiducial control, located behind carrier output attenuator, until OUTPUT meter needle rests on red set line.

(7) Set modulation selector control to 1000 position.

(8) Adjust MOD control until PERCENT MODULATION meter indicates 30.

n. Adjust receiver R.F. GAIN INCREASE control to produce an increase of approximately 1 volt on multimeter.

o. Adjust signal-generator carrier output to approximately 3 microvolts, using PAD reference mark.

p. Adjust receiver tuning until a peak is indicated on multimeter, reducing receiver gain with R.F. GAIN INCREASE control as necessary to protect multimeter. The receiver is now tuned to the signal-generator frequency.

q. Adjust signal-generator carrier output attenuator until multimeter indicates 2.45 volts (10 milliwatts).

r. Set modulation selector control to OFF.

s. Adjust receiver R.F. GAIN INCREASE control until multimeter indicates 0.775 volt (1 milliwatt).

t. Set modulation selector control to 1000.

u. Repeat step q.

v. Repeat steps r and s.

w. Repeat steps n, o, and p, until a 10- to 1-milliwatt signal-to-noise ratio is established, which is indicated when the 0.775- to 2.45-volt ratio is obtained.

NOTE

If this ratio cannot be obtained, set the receiver for the best possible signal-to-noise ratio and proceed with the test.

x. Read voltage on signal-generator carrier output attenuation control (using PAD mark as reference). Indication should be between 4 and 6 microvolts, which is the normal sensitivity of the receiver at 100 mc.

y. Set signal-generator tuning dial for output frequencies of 110, 120, 130, 140, 150, and 156 mc, in turn, and repeat steps p through x for each of these frequencies to obtain respective sensitivities.

z. After completion of step y, check other scheduled routines to see whether this equipment setup is used or whether it is necessary to accomplish this routine as a requisite to starting another. If not, disconnect all test equipment, remove 600-ohm resistor, and replace receiver dust cover. Remount receiver and power supply in rack, and reconnect the items disconnected in step b.

PERFORMANCE TEST—I-F SENSITIVITY

1. GENERAL INFORMATION.

a. The purpose of this routine is to determine whether the sensitivity of the i-f amplifiers is normal.

b. The approximate time required for this routine is one-half hour.

c. Report all measurements that are not within tolerance to the maintenance supervisor for corrective action.

2. TEST EQUIPMENT REQUIRED.

a. Signal Generator TS-497( )/URR.

b. Multimeter AN/PSM-6.

3. MATERIALS REQUIRED.

a. 600-ohm carbon resistor.

b. 0.05-μf capacitor.

c. Screwdriver.

4. PROCEDURES.

a. Set POWER ON switch on power supply to off position.

b. Disconnect the following:

(1) A-C socket connector from power supply.

(2) Jones connector sockets from receiver and power supply.

(3) Antenna coaxial connector at rear of receiver.

c. Remove the following:

(1) Receiver from rack.

(2) Power supply from rack.

(3) Dust cover from receiver chassis.

d. Reconnect (on service bench) items (1) and (2) disconnected in step b.

e. Plug a-c cord into convenience outlet.

f. Connect 600-ohm resistor across terminals 3 and 5 of receiver output transformer.

g. Connect one lead from red jack of multimeter to terminal 5 of receiver output transformer.

h. Connect another lead from black jack of multimeter to terminal 3 of receiver output transformer.

i. Set FUNCTION switch of multimeter to OUTPUT, and RANGE switch to 5 (volts).

j. Set front-panel controls of receiver as given in table below.

CONTROL	POSITION
ATTENUATION control	0 DB
R.F. GAIN INCREASE control	Maximum counterclockwise
AUDIO GAIN INCREASE control	Maximum clockwise
C.W. MANUAL-MANUAL-A.V.C. switch	MANUAL

k. Connect signal generator as follows:

(1) Connect plug connector end of Radio Frequency Cable Assembly CG-683/U to CARRIER OUTPUT jack on signal generator.

(2) Connect GND. binding post of cable CG-683/U, using as short a test lead as possible, to receiver chassis.

(3) Connect a 0.05-μf capacitor to positive binding post of cable CG-683/U, using as short a test lead as possible.

(4) Connect other end of 0.05-μf capacitor to mixer (VT203) grid, pin 1, using as short a lead as possible.

l. Set POWER ON switch on power supply to on position.

m. Set signal-generator controls as follows:

(1) Set POWER switch to ON position.

(2) Set range knob to band B.

(3) Adjust tuning dial until carrier frequency dial is set to 12 mc.

(4) Adjust carrier output attenuator fully counterclockwise.

(5) Set modulation selector control to OFF position.

(6) Adjust ring fiducial control, located behind carrier output attenuator, until OUTPUT meter needle rests on red set line.

(7) Set modulation selector control to 1000 position.

(8) Adjust MOD control until PERCENT MODULATION meter indicates 30.

n. Adjust receiver R.F. GAIN INCREASE control to produce an increase of approximately 1 volt on the multimeter.

o. Adjust signal-generator carrier output attenuator to approximately 5 microvolts.

p. Adjust signal-generator tuning to produce a peak indication on multimeter. Signal-generator tuning should be 12 mc.

q. Set signal-generator modulation selector to OFF position.

r. Adjust receiver R.F. GAIN INCREASE control until multimeter indicates 0.775 volt (1 milliwatt).

s. Set signal-generator modulation selector to 1000 position.

t. Adjust signal-generator carrier output attenuator until multimeter indicates 2.45 volts (10 milliwatts).

u. Repeat steps n and o.

v. Repeat steps p and q.

w. Repeat steps n through q until a 1- to 10-milliwatt signal-to-noise ratio is established, as indicated when 0.775- to 2.45-volt ratio is obtained.

x. Read indication of signal-generator carrier output attenuator. The value should be 15 microvolts or less.

y. After completion of step u, check other scheduled routines to see whether this equipment setup is used or whether it is necessary to accomplish this routine as a requisite to starting another. If not, disconnect all test equipment, remove the 600-ohm resistor, and replace receiver dust cover. Remount receiver and power supply in rack, and reconnect the items disconnected in step b.

PERFORMANCE TEST—I-F SELECTIVITY

1. GENERAL INFORMATION.

a. The purpose of this routine is to determine whether the selectivity of the i-f amplifiers is normal.

b. The approximate time required for this routine is one-half hour.

c. Report all measurements that are not within tolerance to the maintenance supervisor for corrective action.

2. TEST EQUIPMENT REQUIRED.

a. Signal Generator TS-497( )/URR.

b. Multimeter AN/PSM-6.

3. MATERIALS REQUIRED.

a. 600-ohm carbon resistor.

b. 0.05-μf capacitor.

c. Screwdriver.

4. PROCEDURES.

a. In order to perform this routine, it is first necessary to accomplish the PERFORMANCE TEST—I-F SENSITIVITY. Refer to Routine 1.3(2).

b. After determining sensitivity figure from step a above, increase signal-generator output to twice the value of the sensitivity figure. Set modulation selector to 1000.

c. Adjust frequency of signal above 12.0-mc point until output meter indicates 2.45 volts (10 milliwatts).

d. Read indication on carrier frequency dial of signal generator and record on paper, as a frequency figure (not dial divisions).

e. Adjust frequency of signal below 12.0-mc point until output meter indicates 2.45 volts (10 milliwatts).

f. Read indication on carrier frequency dial of signal generator and record on paper, as a frequency figure (not dial divisions).

g. Subtract result of step f from result of step d. The frequency difference should be more than 130 kc (0.130 mc).

h. Increase signal-generator output voltage to 100 times the sensitivity figure determined in step a.

i. Repeat steps c through g. The difference should be less than 350 kc (0.350 mc).

j. Increase signal-generator output voltage to 1000 times the sensitivity figure determined in step a.

k. Repeat steps c through g. The difference should be less than 450 kc (0.450 mc).

l. After completion of step k, check other scheduled routines to see whether this equipment setup is used in another scheduled routine. If not, disconnect all test equipment, remove the 600-ohm resistor, and replace receiver dust cover. Remount receiver and power supply in rack, and connect antenna coaxial connector, a-c socket, and Jones connector sockets.

PERFORMANCE TEST—IMAGE-FREQUENCY REJECTION

1. GENERAL INFORMATION.

a. The purpose of this routine is to determine whether the image-rejection ratio of the receiver is normal.

b. The approximate time required for this routine is 45 minutes.

c. Report all measurements that are not within tolerance to the maintenance supervisor for corrective action.

2. TEST EQUIPMENT REQUIRED.

a. Signal Generator TS-497( )/URR.

b. Multimeter AN/PSM-6.

3. MATERIALS REQUIRED.

a. 600-ohm carbon resistor.

b. Screwdriver.

4. PROCEDURES.

a. In order to perform this routine, it is first necessary to accomplish the routine entitled PERFORMANCE TEST—OVER-ALL RECEIVER SENSITIVITY. Refer to Routine 1.2(2).

b. Set signal-generator controls to provide an output frequency of 100 mc, and tune receiver to resonance at this frequency.

c. Set signal-generator controls to provide an output frequency of 76 mc (twice the IF subtracted from the signal frequency). Do not disturb receiver tuning.

d. Increase signal-generator output voltage until multimeter indicates 2.45 volts (10 milliwatts).

e. Read indication on signal-generator carrier output attenuator. The indication should be greater than 3000 times the sensitivity figure derived in step a for the 100-megacycle setting of the receiver.

f. Using the procedure established in steps b through d for the 100-mc setting of the receiver, set receiver for 110, 120, 130, 140, 150, and 156 mc, in turn, and check image-rejection ratio at each frequency setting. The signal-generator settings for the image frequencies corresponding to the receiver settings given above are: 86, 96, 106, 116, 126, and 132 mc. The indications for the above frequency settings should be the same as in step e.

g. After completion of step f, check other scheduled routines to see whether this equipment setup is used. If not, disconnect all test equipment, remove 600-ohm resistor, and replace dust cover. Remount receiver and power supply in rack, and connect antenna cable, a-c power, and interconnection cable.

PERFORMANCE TEST—TUNING METER

1. GENERAL INFORMATION.

a. The purpose of this routine is to determine whether the tuning meter calibration is accurate.

b. The approximate time required for this routine is 25 minutes.

c. Report all measurements that are not within tolerance to the maintenance supervisor for corrective action.

2. TEST EQUIPMENT REQUIRED.

a. Signal Generator TS-497( )/URR.

b. Multimeter AN/PSM-6.

3. MATERIALS REQUIRED.

a. Screwdriver.

b. Lead with alligator clips at either end.

4. PROCEDURES.

a. Set POWER ON switch on power supply to off position.

b. Disconnect the following:

(1) A-C socket connector from power supply.

(2) Jones connector sockets from receiver and power supply.

(3) Antenna coaxial connector at rear of receiver.

c. Remove the following:

(1) Receiver from rack.

(2) Power supply from rack.

(3) Dust cover from receiver chassis.

d. Reconnect (on service bench) items (1) and (2) disconnected in step b.

e. Plug a-c cord into convenience outlet.

f. Set front-panel controls of receiver as given in table below.

CONTROL	POSITION
ATTENUATION switch	0 DB
R.F. GAIN INCREASE control	Maximum clockwise
AUDIO GAIN INCREASE control	Maximum clockwise
C.W. MANUAL-MANUAL-A.V.C. switch	A.V.C.

g. Set FUNCTION switch on multimeter to DCV-20KΩ/V, and RANGE switch to 250 (volts).

h. Connect one lead from red jack of multimeter to pin 10 of power-supply plug on receiver chassis.

i. Connect another lead from black jack of multimeter to chassis ground.

j. Set POWER ON switch on power supply to on position; allow 10-minute warmup.

k. Rotate SUPPLY VOLTAGE control on power supply until multimeter indicates 210 volts, dc.

l. Disconnect multimeter leads from equipment.

m. Using a lead with clips at either end, connect one clip to antenna coupling jack (center conductor) on rear of receiver, and connect other clip to receiver chassis (ground).

n. Using screwdriver, turn THRESHOLD SENSITIVITY control until tuning meter indicates 5 ma.

o. Disconnect grounding lead from receiver antenna coupling jack and chassis.

p. Connect signal generator as follows:

(1) Connect impedance-matching pad, supplied with signal generator, to CARRIER OUTPUT jack on signal generator.

(2) Connect one end of cord CG-55B/U, supplied with signal generator, to output jack of impedance-matching pad.

(3) Connect other end of cord CG-55B/U to antenna coupling jack (J200) on the rear of receiver.

q. Set signal-generator controls as follows:

(1) Set POWER switch to ON position.

(2) Set range knob to band E.

(3) Adjust tuning dial until carrier frequency dial is set to 100 mc.

(4) Set modulation selector control to OFF position.

(5) Adjust ring fiducial control, located behind carrier output attenuator, until OUTPUT meter needle rests on red set line.

(6) Set carrier output attenuator (using PAD mark as reference) to provide 10-microvolt output.

r. Read indication on TUNING METER. Indication should be 5 ma.

s. Set signal-generator carrier output attenuator to provide output voltages as listed under RECEIVER INPUT in table below. Observe TUNING METER indication for each input, and compare with TUNING METER INDICATION given in table below.

RECEIVER INPUT	TUNING METER INDICATION
10 microvolts (approx)	5 ma.
100 microvolts (approx)	4.8 ma.
1 millivolt (approx)	3.2 ma.
10 millivolts (approx)	2.0 ma.
100 millivolts (approx)	1.2 ma.

t. After completion of the above, disconnect all test equipment and replace receiver dust cover. Remount receiver and power supply in rack, and reconnect the items disconnected in step b. (1) through (3).

PERFORMANCE TEST—RECEIVER CALIBRATION

1. GENERAL INFORMATION.

a. The purpose of this routine is to determine whether the calibrated dial of the receiver is accurate.

b. The approximate time required for this routine is 30 minutes.

c. Report all measurements that are not within tolerance to the maintenance supervisor for corrective action.

2. TEST EQUIPMENT REQUIRED.

a. Frequency Meter TS-323/UR.

3. MATERIALS REQUIRED.

a. Headset.

b. #18 hook-up wire, 6 ft long with alligator clip attached to one end.

4. PROCEDURES.

a. Place frequency meter adjacent to radio receiver.

b. Set up frequency meter as follows:

(1) If external power supply PP-106/U is used, connect to power source and set BATTERIES-EXT. SUPPLY switch to EXT. SUPPLY.

(2) If internal power supply is used, set BATTERIES-EXT. SUPPLY switch to BATTERIES.

(3) Remove antenna from the stowed position and, after first removing dust cap, install antenna in its receptacle.

c. Disconnect antenna coaxial connector located at rear of receiver.

d. Connect frequency meter to receiver by first connecting alligator clip to center conductor of antenna coaxial connector on receiver and then winding about three turns of the insulated hook-up wire around antenna shaft on frequency meter.

e. Set POWER switch on frequency meter to STANDBY (or ON); allow 15-minute warmup.

f. Set POWER ON switch on receiver power supply to on position.

g. After 15-minute interval, set POWER switch on frequency meter to OPERATE, and CALIBRATE switch to ON.

NOTE

Make certain that the MODULATION switch is in the OFF position.

h. Insert headset plug into PHONES receptacle on frequency meter.

i. From calibration book supplied with the frequency meter find page that lists dial setting for 100 mc. At the bottom of this page printed in red ink is the nearest crystal check point along with its corresponding dial setting, which appears in black.

j. Put on headset.

k. Set main tuning dial (DIAL HUNDREDS and DIAL UNITS) to dial setting listed for nearest crystal check point.

l. Rotate R.F. GAIN control fully clockwise.

m. Turn CORRECTOR control until a zero beat is obtained.

CAUTION

When the CORRECTOR is set for zero beat, it should be left in this position for the remainder of the test or until a different frequency is chosen which requires a new crystal check point.

n. Remove and disconnect headset.

o. Set CALIBRATE switch on frequency meter to OFF.

p. Set MODULATION switch on frequency meter to ON.

q. Set main tuning dial (DIAL HUNDREDS and DIAL UNITS) to dial setting for output frequency of 100 mc, found in step i.

r. Set C.W.-MANUAL-MANUAL-A.V.C. switch on receiver to A.V.C. position.

s. Put on headset and insert plug in LINE receptacle.

t. Using tuning control, tune receiver to resonance audibly (loudest tone) and visually by observing TUNING METER for lowest dip of pointer.

u. Adjust R.F. GAIN control on frequency meter and AUDIO GAIN INCREASE and ATTENUATION controls on receiver as required to provide a usable presentation.

v. After carefully establishing resonant point of receiver, read indication on MEGACYCLES dial. The dial reading should not be less than 99 mc nor greater than 101 mc.

w. From calibration book, find dial setting listed for an output frequency of 156 mc.

x. Set up frequency meter for 156 megacycles and tune receiver to resonance using the procedures of step q and step t.

y. After carefully establishing resonant point of receiver, read indication on MEGACYCLES dial. The dial reading should not be less than 155 mc nor greater than 157 mc.

z. From calibration book, find dial setting listed for an output frequency of 130 mc.

aa. Set up frequency meter for 130 mc and tune receiver to resonance using the procedures of step q and step t.

bb. Read indication on MEGACYCLES dial. The indication should not be less than 129 mc nor greater than 131 mc.

cc. Disconnect alligator clip from antenna coupling socket of receiver, and reconnect coaxial connector to receiver antenna coupling socket.

dd. Disconnect hook-up wire from antenna shaft; remove antenna and stow.

ee. Set POWER switch on frequency meter to OFF.

SERVICING PROCEDURE—OPERATIONAL CHECK

1. GENERAL INFORMATION.

a. The purpose of this routine is to check the operation of Radio Receiver BC-639-A.

b. The approximate time required for this routine is 30 minutes.

2. TEST EQUIPMENT REQUIRED.

a. Frequency Meter TS-323/UR.

3. MATERIALS REQUIRED.

a. Headset.

b. #18 hook-up wire, 6 ft long with alligator clip attached to one end.

4. PROCEDURES.

a. PRE-OPERATION PROCEDURES.

(1) Insert headset plug into MONITOR receptacle.

(2) Place frequency meter adjacent to radio receiver.

(3) Remove antenna from its stowed position and, after first removing dust cap, install antenna in its receptacle on frequency meter.

(4) Disconnect antenna coaxial connector located at rear of receiver.

(5) Connect frequency meter to receiver by first connecting alligator clip to center conductor of antenna coaxial connector on receiver and then winding about three turns of the insulated hook-up wire around antenna shaft on frequency meter.

(6) Set POWER ON switch on power supply to on position. Both indicator jewel lamp and dial lamp are illuminated.

(7) Set POWER switch on frequency meter to OPERATE (or ON); allow 15-minute warmup.

(8) From calibration book supplied with frequency meter find dial setting listed for 130 mc.

(9) Set MODULATION switch on frequency meter to ON.

(10) Set main tuning dial (DIAL HUNDREDS and DIAL UNITS) to the dial setting for an output frequency of 130 mc.

NOTE

Extreme accuracy is not required at this time so it is not necessary to calibrate the frequency meter on a crystal check point.

b. OPERATIONAL CHECK.

(1) Set C.W. AND MANUAL-MANUAL-A.V.C. switch to MANUAL.

(2) Set R.F. GAIN INCREASE control fully clockwise. TUNING METER should indicate approximately 5 ma.

(3) Set AUDIO GAIN INCREASE control fully clockwise.

(4) Set ATTENUATION control to 0 DB. Loud rushing noise should be heard in headset.

(5) Set CALIBRATE switch on frequency meter to OFF.

(6) Set R.F. GAIN control on frequency meter at minimum.

(7) Tune receiver to signal from frequency meter (MEGACYCLES dial approximately 130 mc). Loud, clear, 1000-cycle tone should be heard in headset.

(8) Vary AUDIO GAIN INCREASE control from maximum to minimum. Volume of sound in headset should decrease smoothly as control is rotated.

(9) Set AUDIO GAIN INCREASE control fully clockwise.

(10) Set ATTENUATION control first to —6 DB and then to —12 DB. Volume of sound in headset should decrease for each setting of ATTENUATION control.

(11) Set ATTENUATION control to 0 DB.

(12) Vary R.F. GAIN INCREASE control from maximum to minimum. TUNING METER indication and sound in headset should decrease smoothly as control is rotated.

(13) Set R.F. GAIN INCREASE control to maximum.

(14) Set MODULATION switch on frequency meter to OFF.

(15) Set C.W. AND MANUAL-MANUAL-A.V.C. switch to C.W. AND MANUAL.

(16) Turn C.W. TONE CONTROL to either side of center mark on front panel. Zero beat indication should occur at exact center mark, and at extreme clockwise and counterclockwise positions a 1000-cycle tone should be heard.

(17) Set MODULATION switch on frequency meter to ON.

(18) Set R.F. GAIN control on frequency meter to maximum.

(19) Set C.W. AND MANUAL-MANUAL-A.V.C. switch to A.V.C. and tune receiver through resonance. The TUNING METER indication should dip to a low value as the receiver is tuned through resonance, and an undistorted 1000-cycle tone should be heard in headset at resonance.

(20) Using the procedures given in step a.(8) and step a.(10), set up frequency meter to provide in turn outputs at 100, 130, and 156 mc.

(21) Tune receiver to resonance at each of the frequencies given in step b.(20) above, and note magnitude of dip (in ma.) of TUNING METER at each resonant point. The three indications should be of the same magnitude.

c. TURNING THE EQUIPMENT OFF.

(1) Set POWER ON switch on power supply to off position.

d. POST-OPERATION PROCEDURES.

(1) Remove alligator clip from receiver antenna coupling socket, and reconnect original antenna connector.

(2) Disconnect headset plug from MONITOR receptacle.

(3) Disconnect hook-up wire from antenna shaft; remove antenna and stow.

(4) Set POWER switch on frequency meter to OFF.

SERVICING PROCEDURE—I-F AMPLIFIER AND C-W OSCILLATOR ALIGNMENT

1. GENERAL INFORMATION.

a. The purpose of this routine is to align the i-f amplifiers and c-w oscillator of the receiver.

b. The approximate time required for this routine is 45 minutes (exclusive of warm-up time).

c. For best results the receiver and signal generator should be warmed up for one hour before adjustments are made.

2. TEST EQUIPMENT REQUIRED.

a. Signal Generator TS-497( )/URR.

b. Multimeter AN/PSM-6.

3. MATERIALS REQUIRED.

a. 600-ohm carbon resistor.

b. 0.05-μf capacitor.

c. Alignment tool.

d. Screwdriver.

4. PROCEDURES.

a. I-F ALIGNMENT.

(1) As a requisite to performing this routine, it is first necessary to accomplish the PERFORMANCE TEST—I-F SENSITIVITY. Refer to Routine 1.3(2).

(2) Insert headset jack into LINE receptacle.

(3) With equipment set up as in step (1), set signal-generator controls to provide an output frequency of 12 mc modulated 30 percent at 1000 cycles.

(4) Adjust signal-generator carrier output attenuator just high enough to cause a small change both in the output meter reading and in the 1000-cycle tone in the headset.

NOTE

During the first part (up to step (16)) of this procedure, keep the signal output voltage at the lowest possible level that will provide a usable alignment indication.

(5) Using insulated aligning tool, turn powdered-iron core (229-8) in secondary winding of 4th i-f transformer for maximum deflection of multimeter. Refer to figure 2-1 for location of adjustments.

(6) Turn core (229-7) of primary winding of 4th i-f transformer for maximum deflection of multimeter. See note in step (4).

(7) Turn core (229-6) of secondary winding of 3rd i-f transformer for maximum deflection of multimeter.

(8) Turn core (229-5) of primary winding of 3rd i-f transformer for maximum deflection of multimeter.

(9) Set signal-generator controls to provide an output frequency of 12,070 kc modulated 30 percent at 1000 cycles.

(10) Turn core (229-4) of secondary winding of 2nd i-f transformer for maximum deflection of multimeter.

(11) Turn core (229-2) of secondary winding of 1st i-f transformer for maximum deflection of multimeter.

(12) Set signal-generator controls to provide an output frequency of 11,930 kc modulated 30 percent at 1000 cycles.

(13) Turn core (229-3) of primary winding of 2nd i-f transformer for maximum multimeter indication.

(14) Turn core (229-1) of primary winding of 1st i-f transformer for maximum deflection of multimeter.

(15) Repeat steps (9) through (13) until multimeter deflection is maximum and of approxmately the same amplitude at both (12,070 and 11,930 kc) frequencies.

(16) Set up a signal-to-noise ratio of 10 to 1 milliwatt by checking i-f sensitivity as given in PERFORMANCE TEST—I-F SENSITIVITY. Refer to Routine 1.3(2).

(17) While maintaining the 10- to 1-milliwatt signal-to-noise ratio established in step (16), repeat steps (3), (5), (6), (7), and (8) until no further increase in receiver output can be obtained.

(18) Repeat steps (9), (10), (11), (12), (13), and (14), until receiver output is the same at either frequency, i.e., 11,930 and 12,070 kc.

(19) Set signal-generator control to provide an output frequency of 12 mc.

(20) Read indication on carrier output attenuator dial of signal generator. The indication should be less than 15 microvolts (usually around 10 microvolts).

b. C-W OSCILLATOR ALIGNMENT.

(1) After completing the i-f alignment, perform the c-w (beat-frequency) oscillator alignment. Do not make any changes in test setup. Refer to figure 2-1 for component locations.

(2) Set pointer of the C.W. TONE CONTROL knob to center line mark on front panel.

(3) Inspect to see whether the red line on the shaft, which connects to the rear coupler, is pointing directly up. Refer to figure 2-1.

NOTE

If the red line is not pointing directly up, use the Allen wrench supplied with the receiver and loosen the setscrews in the coupler. Turn the shaft until the red line is pointing directly up, then tighten setscrews.

(4) Set C.W. AND MANUAL-MANUAL-A.V.C. switch to C.W. AND MANUAL.

(5) Set signal-generator modulation selector switch to OFF.

(6) Set carrier output attenuator for maximum r-f output of signal generator.

(7) Insert alignment tool through opening in beat-frequency-oscillator assembly (272) to the left of c-w oscillator tube VT-211. Turn this screw until a zero beat is obtained in headset.

(8) Set C.W. TONE CONTROL to the right (or left) to give approximately a 1000-cycle tone.

(9) Using alignment tool, turn iron-core screw (266) of c-w oscillator plate coil, for maximum deflection of multimeter. When this maximum point is reached, turn screw (266) one additional turn in a clockwise direction.

(10) If following SERVICING PROCEDURES are not to be performed, disconnect all test equipment, remove 600-ohm resistor, and replace receiver dust cover. Remount receiver and power supply in rack, and reconnect a-c socket connector, Jones connector sockets, and antenna coaxial connector.

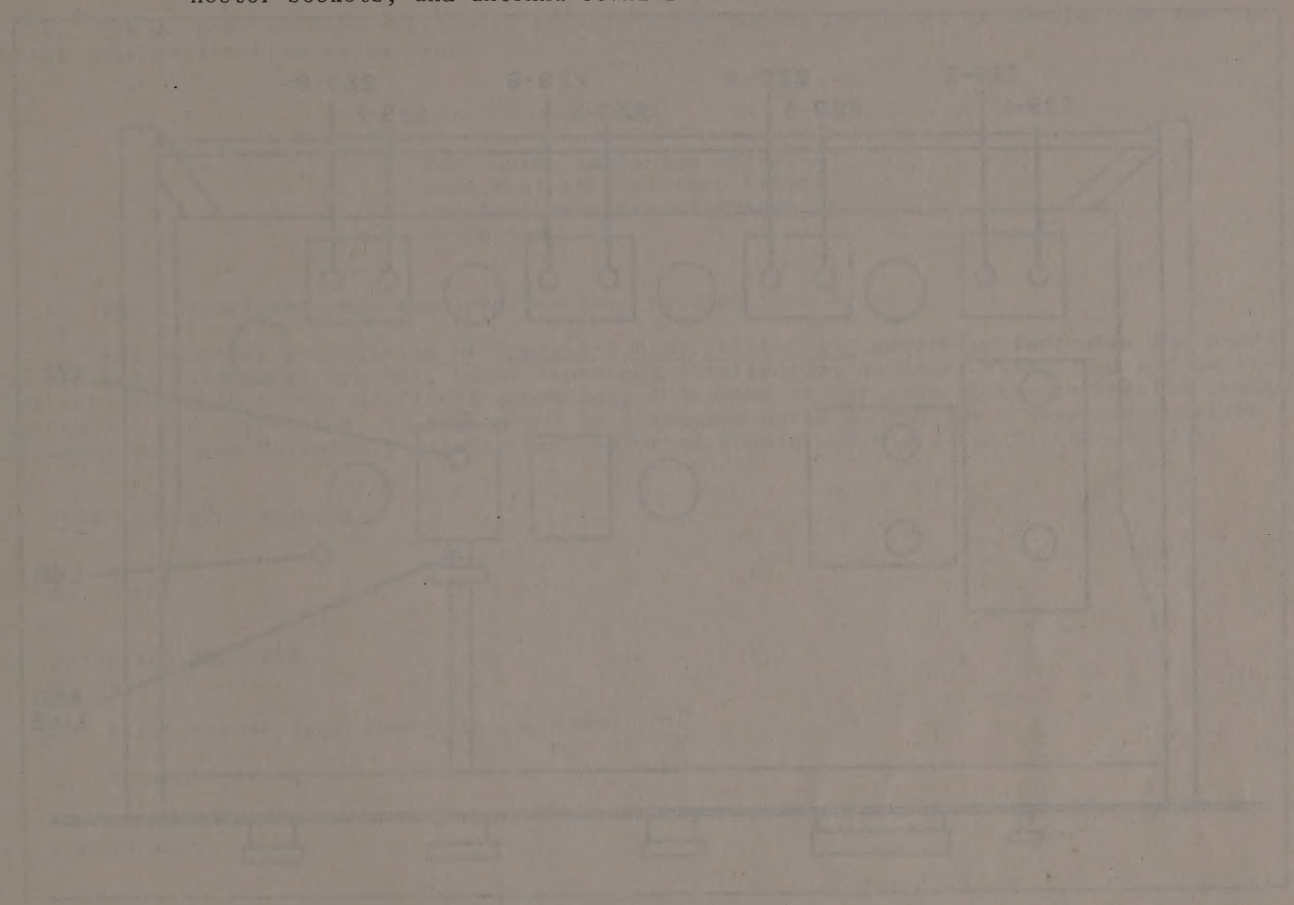

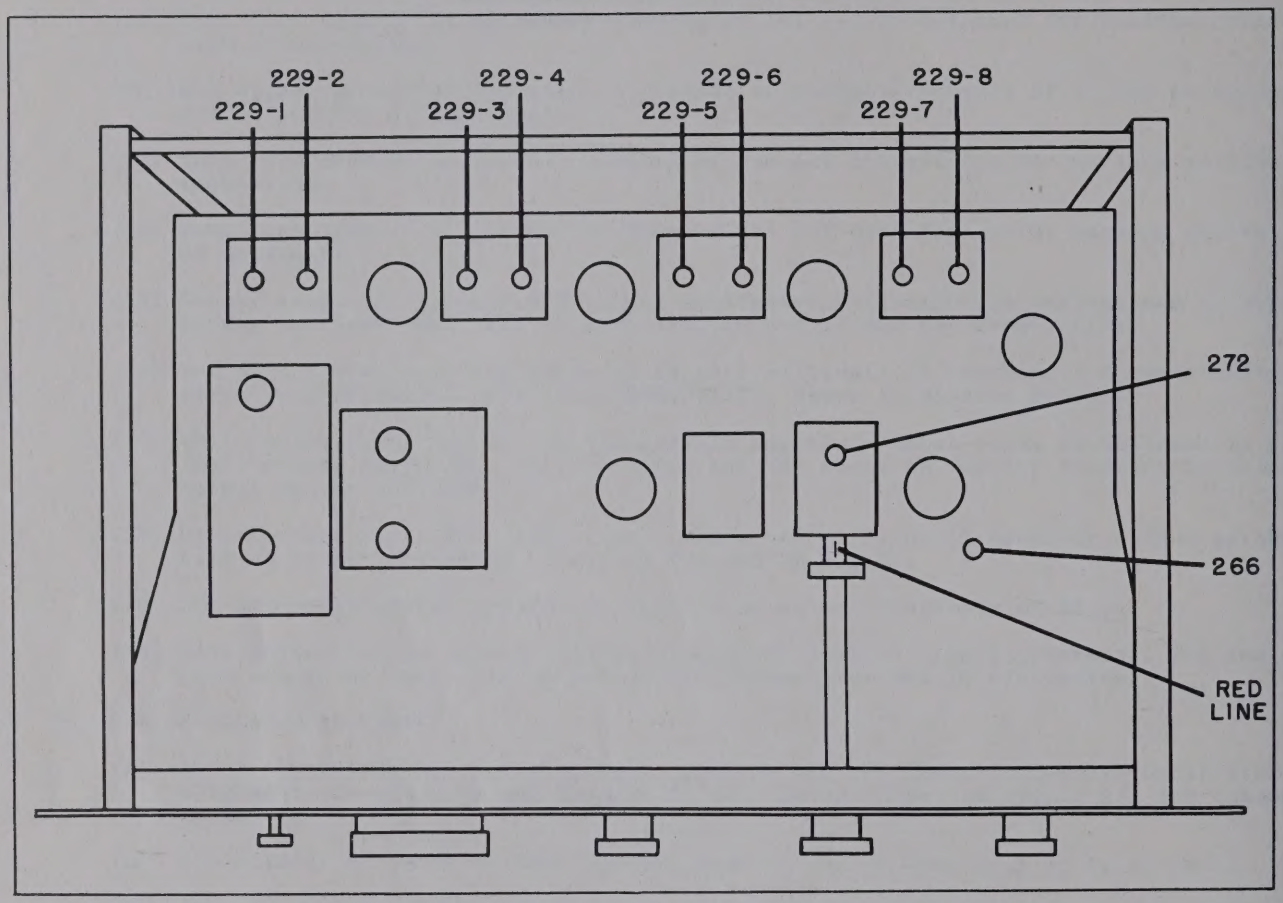

Figure 2-1. Radio Receiver BC-639-A, Showing Location of Adjustments

SERVICING PROCEDURE—TUNING MECHANISM ADJUSTMENT

1. GENERAL INFORMATION.

a. The purpose of this routine is to adjust the tuning mechanism to ensure that the receiver dial calibration is accurate.

NOTE

The tuning mechanism adjustment must be performed before complete receiver alignment is attempted.

b. The approximate time required for this routine is 1 hour.

c. Low receiver sensitivity or incorrect dial calibration generally indicates the need for receiver alignment. However, since front-end (oscillator, doubler, mixer, and r-f amplifier) alignment is a very difficult operation, requiring on the part of the technician training, skill, and experience, it should not be attempted until a need for a complete receiver alignment has been definitely established. Refer to Routines 1.2(2), 1.3(2), and 1.7(8).

2. TEST EQUIPMENT REQUIRED.

a. None.

3. MATERIALS REQUIRED.

a. Allen wrench (supplied with receiver).

b. Screwdriver.

4. PROCEDURES.

a. Disconnect the following:

(1) Jones connector socket from receiver power-supply plug.

(2) Antenna coaxial connector from receiver antenna coupling socket.

b. Remove receiver from mounting rack.

c. Remove receiver dust cover.

d. Rotate receiver tuning knob from stop to stop.

(1) At each stop point, note whether either edge of quadrant gear on gear-drive assembly touches casting.

(2) If either edge touches casting, loosen Allen setscrews on gear hub, move gear to provide proper clearance, and then tighten Allen setscrews.

e. Rotate tuning knob counterclockwise (to the left) until it reaches the stop.

f. Loosen the two Allen setscrews in dial hub.

g. While holding tuning knob against its stop, manually position MEGACYCLES dial until the line marked STOP coincides with index on dial window.

h. Tighten the two setscrews in dial hub.

i. Loosen the four setscrews on the two quadrant-gear hubs.

j. With tuning knob held fully clockwise, manually position quadrant gears so that their top edges are parallel to chassis.

k. Tighten the four setscrews on quadrant hubs.

l. Rotate tuning knob clockwise (to the right) until ALIGN mark on MEGACYCLES dial coincides with index on dial window.

m. Loosen the two setscrews on quadrant gear attached to the three-gang capacitor.

n. While holding tuning knob at ALIGN mark on MEGACYCLES dial, manually position (approach from the left side as viewed from front panel of receiver) rotor plates (movable) of the three-gang capacitor so that they are fully meshed with stator plates (fixed).

o. Tighten the two setscrews.

p. Loosen the two setscrews on flexible coupler, which couples dial drive and gear assembly to the two-gang capacitor.

q. While holding tuning knob at the align mark as set in step l, position rotor plates (movable) so that they are fully meshed with stator plates (fixed).

r. Tighten the two Allen setscrews.

s. Replace dust cover, and install receiver in rack.

t. Connect Jones connector socket to receiver power-supply plug.

u. Perform Routine 1.7(8).

v. Disconnect alligator clip from antenna coupling socket of receiver, and reconnect coaxial antenna lead to antenna coupling socket.

w. Disconnect hook-up wire from antenna shaft; remove antenna and stow.

x. Set POWER switch on frequency meter to OFF.

SERVICING PROCEDURE—FRONT-END ALIGNMENT

1. GENERAL INFORMATION.

a. The purpose of this routine is to align the h-f oscillator, doubler, mixer, and r-f amplifier circuits and to calibrate the dial of the receiver.

NOTE

The tuning mechanism adjustment must be performed before this alignment is attempted. Refer to Routine 2.3(5).

b. The approximate time required for this routine is 4 hours.

c. Low receiver sensitivity or incorrect dial calibration generally indicates the need for complete receiver alignment. However, since alignment and calibration of the front end is a very difficult operation requiring on the part of the technician training, skill, and experience, it should not be attempted until a need for a complete receiver alignment has been definitely established. Refer to Routines 1.2(2), 1.3(2), and 1.7(8).

If the tuning mechanism is correctly adjusted but the dial calibration is incorrect, the need for alignment is immediately indicated. However, if the dial calibration is correct, but improper alignment is suspected, the receiver sensitivity should be checked. Refer to Routines 1.2(2) and 1.3(2).

d. It is necessary in this routine to adjust the spacing (coupling) between the r-f amplifier plate coil, 212, and the mixer grid coil, 213, and also the spacing between the mixer grid coil, 213, and the doubler plate coil, 214. These spacing adjustments serve to set the coils in the proper relationship to each other, so that the circuits will track (at maximum possible output) as the receiver is tuned across its range. The end result of the spacing adjustments should be such that any change in the spacing causes a decrease in the receiver output, thus ensuring maximum receiver gain.

2. TEST EQUIPMENT REQUIRED.

a. Signal Generator TS-497( )/URR.

b. Multimeter AN/PSM-6.

3. MATERIALS REQUIRED.

a. 600-ohm carbon resistor.

b. Plastic pliers (or one with insulated jaws).

c. Alignment tool.

d. Tuning wand.

e. Headset.

f. Screwdriver.

4. PROCEDURES.

a. Perform TUNING MECHANISM ADJUSTMENT as given in Routine 2.3(5).

b. Perform I-F SENSITIVITY check as given in Routine 1.3(2).

c. Perform OVER-ALL RECEIVER SENSITIVITY check as given in Routine 1.2(2).

d. With the test equipment setup as given in step c above, turn (use screwdriver) THRESHOLD SENSITIVITY control fully clockwise (to the right).

e. Set R.F. GAIN INCREASE control fully clockwise, and tune receiver to resonance at 156 mc.

f. Set signal-generator carrier output attenuator to a level just high enough to cause a small change in multimeter indication and to provide a 1000-cycle tone in headset.

g. Refer to figure 2-2 for locations of the adjustments which follow.

h. Vary following adjustments in order given for maximum deflection of multimeter and maximum sound in headset.

(1) Oscillator trimmer, 204-5, lower screw on front section of the two-gang capacitor.

(2) Doubler trimmer, 204-4, on rear section of the two-gang capacitor.

(3) Mixer trimmer, 204-3, on rear section of the three-gang capacitor.

(4) R-F amplifier plate trimmer, 204-2, on center section of the three-gang capacitor.

(5) R.F amplifier grid trimmer, 204-1, on front section of the three-gang capacitor.

NOTE

It may be necessary at first to use a fairly high output voltage from the signal generator, but as the circuits are brought into alignment, the signal generator output should be reduced to the lowest level that provides a usable indication. Reduce the setting of the R.F. GAIN INCREASE control, if necessary.

i. Set control of signal generator to provide an output frequency of 100 mc, and tune receiver to resonance at this frequency.

j. Using insulated screwdriver, turn iron-core of h-f oscillator coil, 223 (top screw on front section of the two-gang capacitor), either in or out to produce maximum deflection of multimeter (see figure 2-2 for location of adjustment).

k. Check the following r-f coils for the correct values of inductance in the order given: mixer-grid coil, 213; r-f plate coil, 212; antenna-grid coil, 201; and doubler-plate coil, 214. It is necessary in this step to use the tuning wand to determine whether the inductance of the coils given above should be increased or decreased. The procedure is given in the text below.

(1) Place each end of tuning wand near coil to be checked.

(2) If the multimeter indication increases when the brass end of the tuning wand is held near the coil, the inductance of the coil is too high and must be decreased by spreading the turns of the coil farther apart. Use the insulated tools for this operation.

(3) If the multimeter indication increases when the iron-slug end of the tuning wand is held near the coil, the inductance of the coil is too low and must be increased by squeezing the turns of the coil closer together. Use the insulated tools for this operation.

(4) If the multimeter indication decreases when each end of the tuning wand is placed near the coil, the inductance of the coil is correct and no adjustment is needed.

l. Set control of signal generator to provide an output frequency of precisely 156 mc, and tune receiver to resonance at this frequency.

m. Observe MEGACYCLES dial of receiver. It should indicate 156 mc.

n. Set control of signal generator to provide an output frequency of precisely 100 mc, and tune receiver to resonance at this frequency.

o. Observe MEGACYCLES dial of receiver. It should indicate 100 mc.

p. If MEGACYCLES dial indications are not as given in steps m and o, proceed as follows:

(1) Set receiver tuning control so that MEGACYCLES dial indicates precisely 100 mc.

(2) Using insulated screwdriver, turn iron core of oscillator coil, 223, to produce maximum deflection of multimeter.

(3) Set controls of signal generator to provide an output frequency of 156 mc.

(4) Set receiver tuning control so that MEGACYCLES dial indicates precisely 156 mc.

(5) Using insulated screwdriver, turn oscillator trimmer, 204-5, to produce maximum deflection of multimeter.

(6) Repeat step p.(1) through (5) as required to obtain accurate dial calibration.

q. Set control of signal generator to provide an output at a frequency of 156 mc, and tune receiver to resonance at that frequency.

r. Vary following adjustments in the order given for maximum deflection of multimeter and maximum sound in headset: 204-4, 204-3, 204-2, and 204-1. Refer to figure 2-2 and step h.(2) through (5).

s. Set control of signal generator to provide an output at a frequency of 100 mc, and tune receiver to resonance at that frequency.

t. Repeat step k.

u. Set control of signal generator to provide an output at a frequency of 130 mc, and tune receiver to resonance at that frequency.

v. Before starting this procedure, refer to paragraph 1.d. of this routine. Adjust (use the insulated tools) spacing between r-f amplifier plate coil, 212, and mixer grid coil, 213, for maximum deflection of multimeter.

NOTE

The proper spacing is approximately $\frac{1}{4}$ inch.

w. Adjust spacing between mixer-grid coil, 213, and doubler-plate coil, 214, by moving doubler plate coil only for maximum deflection of multimeter. Do not disturb position of mixer-grid coil, 213.

NOTE

The final spacing on either adjustment given above should be such that either decreasing or increasing the space between the coils, causes the deflection of the multimeter to decrease.

x. Set control of signal generator to provide an output at a frequency of 100 mc, and tune receiver to resonance at this frequency.

y. Repeat step k.

NOTE

So as not to disturb the spacing adjustments made in step w, change the inductance of the r-f amplifier (212) and mixer (213) coils by spreading or squeezing together the outside turns of the coil (for maximum deflection of multimeter) while holding the inside turn stationary. To change the inductance of the doubler (hairpin) coil (214), decrease the effective diameter of the loop. Be careful not to change the spacing between the doubler coil (214) and the mixer-grid coil (213).

z. Repeat steps u, v, and w.

aa. Set control of signal generator to provide an output at a frequency of 156 mc, and tune receiver to resonance at this frequency.

bb. Perform steps h.(2) through (5).

cc. Turn signal generator off, and using insulated screwdriver, turn THRESHOLD SENSITIVITY control until TUNING METER indicates 5 ma.

dd. Repeat step c. The sensitivity figure should be 5 microvolts (or less) from one 10-mc measuring point to the next, and should not vary more than one microvolt over the entire receiver range. If the sensitivity varies more than this amount, perform the following steps:

(1) Set control of signal generator to provide an output at a frequency of 130 mc, and tune receiver to resonance at this frequency.

(2) Check (or adjust) spacing of doubler coil, 214, as given in step w. It is possible the spacing between the doubler coil (214) and mixer coil (213) was disturbed when the inductance of the coils was adjusted.

ee. Disconnect all test equipment, remove 600-ohm resistor, and replace receiver dust cover. Remount receiver and power supply in rack, and connect antenna coaxial connector, a-c socket, and Jones connector sockets.

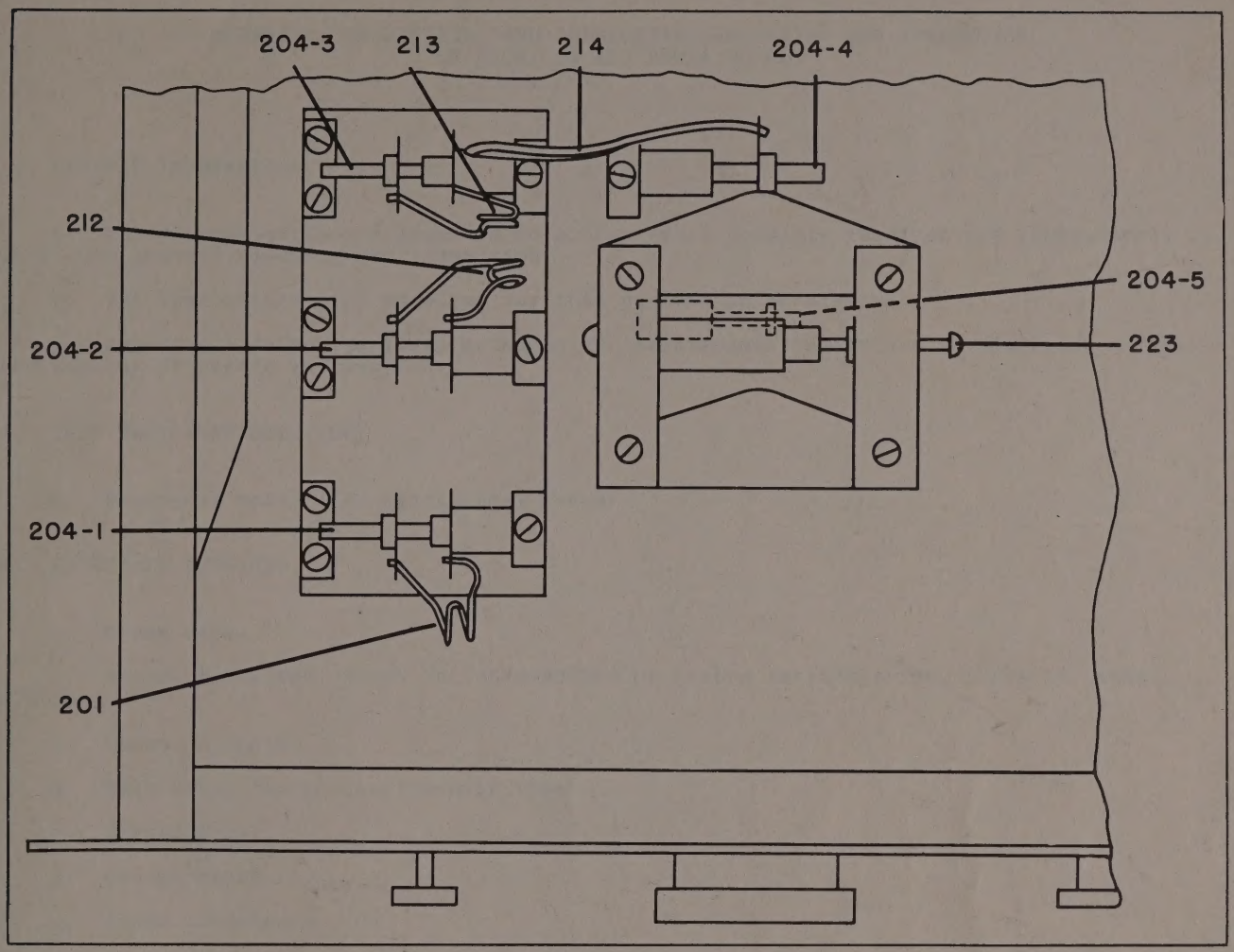

Figure 2-2. Receiver Front End, Showing Location of Adjustments

CLEANING, INSPECTING, AND LUBRICATING—CLEANING AND INSPECTION OF RECEIVER AND POWER SUPPLY

1. GENERAL INFORMATION.

a. The purpose of this routine is to accomplish a complete receiver and power-supply removal and general cleaning and inspection.

b. The approximate time required for this routine is 45 minutes.

c. Report all defective items noted to the maintenance supervisor to determine whether replacement or repair is required.

2. TEST EQUIPMENT REQUIRED.

a. Frequency meter (for operational check).

3. MATERIALS REQUIRED.

a. Clean rags.

b. Trichlorethylene, stock No. 8500-950500 or carbon tetrachloride, stock No. 8500-278000.

c. Vacuum cleaner.

d. Dust brush (large camel's-hair type).

e. Screwdriver.

f. Crocus cloth.

g. #0000 sandpaper.

h. Pipe cleaner.

4. PROCEDURES.

a. REMOVAL AND DISASSEMBLY.

(1) Set POWER ON switch on power supply to off position.

(2) Disconnect a-c socket connector from power supply.

(3) Disconnect Jones connector sockets from both receiver and power supply.

(4) Disconnect antenna coaxial connector located at rear of receiver.

(5) Remove receiver from rack by removing the six screws that hold the panel to the rack. Replace screws in rack temporarily to prevent loss.

(6) Remove power supply from rack by removing the four screws that hold it to the rack.

(7) Remove receiver dust cover by removing the 15 screws (including the three screws around the antenna terminal) that hold it to the chassis.

(8) Remove power-supply dust cover by removing the two binder-head screws at the rear that hold it to the chassis.

b. CLEANING.

CAUTION

During the cleaning operation, be very careful not to bend any of the r-f coils and do not touch any of the trimmer capacitors. The shape of the small coils may be distorted as a result of alignment adjustments. Do not attempt to change their shape.

(1) Using dust brush and vacuum cleaner, clean all top-side and under-side components and chassis of both receiver and power supply.

NOTE

On the receiver, clean the areas between the capacitor plates with a clean pipe cleaner.

(2) Moisten cloth with cleaning solvent and wipe clean any grease or oil-stained areas.

WARNING

CARBON TETRACHLORIDE IS TOXIC. AVOID PROLONGED INHALATION OF ITS VAPORS. THE WHITISH RESIDUE LEFT AFTER EVAPORATION OF THE CARBON TETRACHLORIDE SHOULD ALWAYS BE CAREFULLY AND COMPLETELY WIPED OFF TO PREVENT CORROSION OR DAMAGE TO PARTS.

(3) Using solvent-moistened cloth, wipe down front panels and control knobs of both units; then dry with a dry, clean, non-linting cloth.

(4) Polish all control knobs and glass areas of TUNING METER and MEGACYCLES dial.

(5) Remove jewel bezel of indicator light on power supply. Wipe interior surfaces and replace.

(6) Using #0000 sandpaper, remove rust and recoat surface with fungi-proofing varnish. (Lacquer, fungus-resistant, Spec. No. 71-2202, stock No. 6G1005.3 or equivalent.)

(7) Using solvent-moistened cloth, wipe down interior and exterior surfaces of dust covers for both units. Wipe dry with clean, dry, non-linting cloth.

c. INSPECTION.

(1) Inspect all nuts, bolts, and screws for tightness; tighten where necessary.

(2) Inspect all wiring leads to terminals for corroded solder connections or loose mechanical connections.

CAUTION

Do not disturb alignment adjustments or move the leads about while making this inspection.

(3) Examine resistors and capacitors for bulging, discoloration, cracks, etc.

(4) Examine transformers and chokes for discoloration.

(5) Remove the three fuses of the power supply. Check for correct rating. Burnish contact surfaces. Examine for firm mechanical connection between fuse and fuse holder.

(6) Inspect all control knobs for loose setscrews; tighten if necessary.

(7) Replace dust covers on receiver and power-supply chassis. Remount these units in rack and reconnect cables.

(8) Perform operational check as given in Routine 2.1(5).

CLEANING, INSPECTING, AND LUBRICATING—LUBRICATION OF RECEIVER

1. GENERAL INFORMATION.

a. The purpose of this routine is to lubricate the parts of the receiver that require it. The power supply does not require lubrication.

b. Do not lubricate the variable tuning capacitors, potentiometers, or any trimmer adjustments. The only assembly requiring lubrication is the tuning gear mechanism.

c. This routine is most conveniently accomplished when the receiver is removed for its periodic cleaning and inspection. Refer to Routine 3.1(1).

2. TEST EQUIPMENT REQUIRED.

a. None.

3. MATERIALS REQUIRED.

a. Clean rags.

b. Trichlorethylene, stock No. 8500-950500 or carbon tetrachloride, stock No. 8500-278000.

c. Small camel's-hair brush.

d. Screwdriver.

e. Grease, lubricating, Royco No. 6A or Andoc "C".

4. PROCEDURES.

a. Set POWER ON switch on power supply to off position.

b. Disconnect Jones connector socket from receiver.

c. Disconnect antenna coaxial connector located at rear of receiver by first removing locknut and withdrawing connector from coupling socket.

d. Remove receiver from rack by removing the six screws that hold the panel to the rack. Replace screws temporarily in rack to prevent loss.

e. Remove receiver dust cover by removing the 15 screws (including the three screws around antenna terminal) that hold it to the chassis.

f. Using small camel's-hair brush moistened with cleaning solvent, clean gear teeth and gear faces of all gears in tuning gear mechanism. Wipe dry with clean, dry, non-linting cloth.

WARNING

CARBON TETRACHLORIDE IS TOXIC. AVOID PROLONGED INHALATION OF ITS VAPORS. THE WHITISH RESIDUE LEFT AFTER EVAPORATION OF CARBON TETRACHLORIDE SHOULD ALWAYS BE CAREFULLY AND COMPLETELY WIPED OFF TO PREVENT CORROSION OR DAMAGE TO PARTS.

g. Apply thin coating of grease (Royco No. 6A or Andoc "C") to gear teeth and gear faces cleaned above. Operate tuning mechanism several times through its complete range. Remove excess grease.

h. Replace dust cover. Remount receiver in rack and reconnect cables.

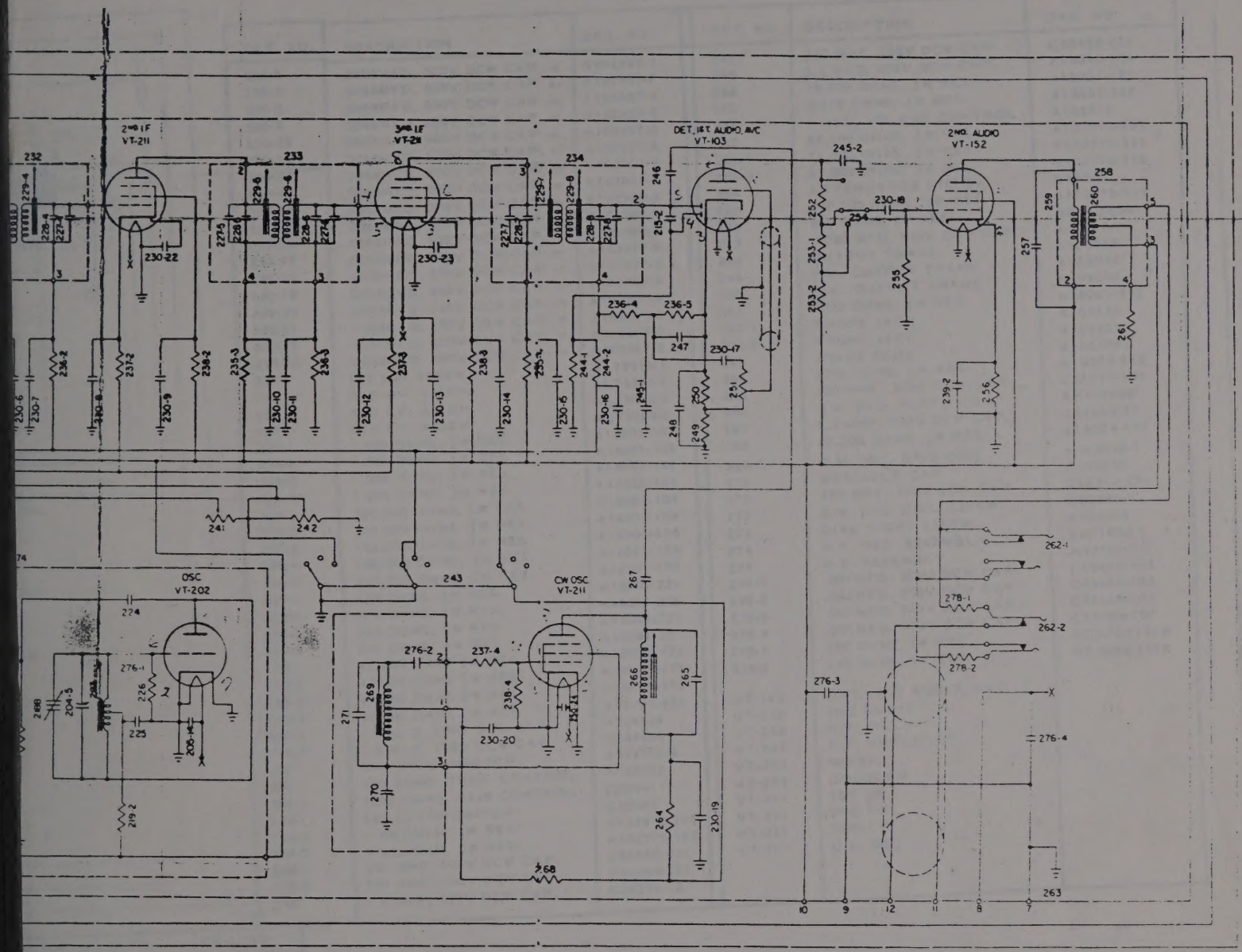

DESCRIPTION	DWG. NO.	REF. NO.	DESCRIPTION	DWG. NO.	REF. NO.	DESCRIPTION	DWG. NO.
1,000 OHMS, ½W RES.	A102975-102	224	27MMF, 500V DCW CAP.	C58469-270	228-6	60MMF, 500V DCW CAP.	C58495-6
1,000 OHMS, ½W RES.	A102975-102	225	150MMF, 500V DCW CAP.	C58469-151	228-7	60MMF, 500V DCW CAP.	C58495-6
R.F. PLATE COIL	A105065	226	47,000 OHMS ½W RES.	A102975-473	228-8	60MMF, 500V DCW CAP.	C58495-6
MIXER GRID COIL	A105066	227-1	15MMF, 500V DCW CAP.	A25715-15	229-1	IF COIL	AA10420
DOUBLER PLATE COIL	A104311	227-2	15MMF, 500V DCW CAP.	A25715-15	229-2	IF COIL	AA10420
47MMF, 500V DCW CAP.	C58469-470	227-3	15MMF, 500V DCW CAP.	A25715-15	229-3	IF COIL	AA10420
47MMF, 500V DCW CAP.	C58469-470	227-4	15MMF, 500V DCW CAP.	A25715-15	229-4	IF COIL	AA10420
1.8 MEGOHMS ½W RES.	A102975-185	227-5	15MMF, 500V DCW CAP.	A25715-15	229-5	IF COIL	AA10420
270,000 OHMS ½W RES.	A102975-274	227-6	15MMF, 500V DCW CAP.	A25715-15	229-6	IF COIL	AA10420
GANG CAP. (2 SEC)	L72798-2	227-7	15MMF, 500V DCW CAP.	A25715-15	229-7	IF COIL	AA10420
4,700 OHMS ½W RES.	A102975-472	227-8	15MMF, 500V DCW CAP.	A25715-15	229-8	IF COIL	AA10420
4,700 OHMS ½W RES.	A102975-472	228-1	60MMF, 500V DCW CAP.	C58495-600	230-1	.0068MFD, 500V DCW CAP.	A102967-
56,000 OHMS ½W RES.	A102975-563	228-2	60MMF, 500V DCW CAP.	C58495-600	230-2	.0068MFD, 500V DCW CAP.	A102967-
560 OHMS ½W RES.	A102975-561	228-3	60MMF, 500V DCW CAP.	C58495-600	230-3	.0068MFD, 500V DCW CAP.	A102967-
27,000 OHMS ½W RES.	A102975-273	228-4	60MMF, 500V DCW CAP.	C58495-600	230-4	.0068MFD, 500V DCW CAP.	A102967-
H.F. OSC. COIL	A105061	228-5	60MMF, 500V DCW CAP.	C58495-600	230-5	.0068MFD, 500V DCW CAP.	A102967-

Revised 1

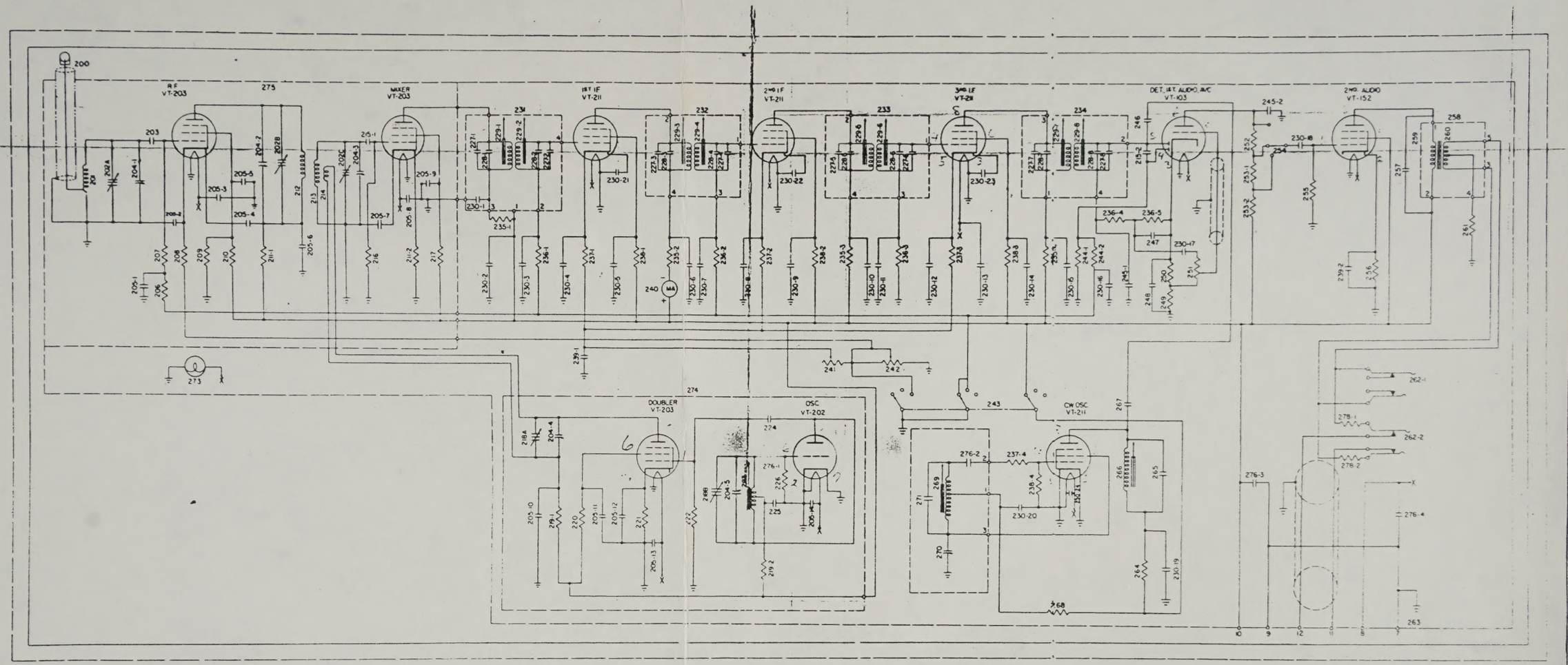

REF NO.	DESCRIPTION	DWG NO.
200	ANTENNA PLUG	C58585
201	ANTENNA COIL	A105064
202	GANG CAP (3 SEC)	L72799-2
203	15MMF, 500V DCW CAP.	C58469-150
204-1	TRIMMER CAP.	L72799-2
204-2	TRIMMER CAP.	L72799-2
204-3	TRIMMER CAP.	L72799-2
204-4	TRIMMER CAP.	L72799-2
204-5	TRIMMER CAP.	L72799-2
205-1	680MMF, 500V DCW CAP. •	C58469-102
205-2	680MMF, 500V DCW CAP. •	C58469-102
205-3	680MMF, 500V DCW CAP. •	C58469-102
205-4	680MMF, 500V DCW CAP. •	C58469-102
205-5	680MMF, 500V DCW CAP. •	C58469-102
205-6	680MMF, 500V DCW CAP. •	C58469-102
205-7	680MMF, 500V DCW CAP. •	C58469-102

REF. NO.	DESCRIPTION	DWG. NO.
205-8	680MMF, 500V DCW CAP. •	C58469-102
205-9	680MMF, 500V DCW CAP. •	C58469-102
205-10	680MMF, 500V DCW CAP. •	C58469-102
205-11	680MMF, 500V DCW CAP. •	C58469-102
205-12	680MMF, 500V DCW CAP. •	C58469-102
205-13	680MMF, 500V DCW CAP. •	C58469-102
205-14	680MMF, 500V DCW CAP. •	C58469-102
205-15	680MMF, 500V DCW CAP. •	C58469-102
205-16	680MMF, 500V DCW CAP. •	C58469-102
205-17	680MMF, 500V DCW CAP. •	C58469-102
205-18	680MMF, 500V DCW CAP. •	C58469-102
206	100,000 OHMS, ½W RES.	A102975-104
207	560,000 OHMS, ½W RES.	A102975-564
208	330 OHMS, ½W RES.	A102975-331
209	120,000 OHMS, ½W RES.	A102975-124
210	39,000 OHMS, ½W RES.	A18004-393

REF. NO.	DESCRIPTION	DWG. NO.
211-1	1,000 OHMS, ½W RES.	A102975-102
211-2	1,000 OHMS, ½W RES.	A102975-102
212	R.F. PLATE COIL	A105065
213	MIXER GRID COIL	A105066
214	DOUBLER PLATE COIL	A104311
215-1	47MMF, 500V DCW CAP.	C58469-470
215-2	47MMF, 500V DCW CAP.	C58469-470
216	1.8 MEGOHMS ½W RES.	A102975-185
217	270,000 OHMS ½W RES.	A102975-274
218	GANG CAP. (2 SEC)	L72798-2
219-1	4,700 OHMS ½W RES.	A102975-472
219-2	4,700 OHMS ½W RES.	A102975-472
220	56,000 OHMS ½W RES.	A102975-563
221	560 OHMS ½W RES.	A102975-561
222	27,000 OHMS ½W RES.	A102975-273
223	H.F. OSC. COIL	A105061

REF. NO.	DESCRIPTION	DWG. NO.
224	27MMF, 500V DCW CAP.	C58469-270
225	150MMF, 500V DCW CAP.	C58469-151
226	47,000 OHMS ½W RES.	A102975-473
227-1	15MMF, 500V DCW CAP.	A25715-15
227-2	15MMF, 500V DCW CAP.	A25715-15
227-3	15MMF, 500V DCW CAP.	A25715-15
227-4	15MMF, 500V DCW CAP.	A25715-15
227-5	15MMF, 500V DCW CAP.	A25715-15
227-6	15MMF, 500V DCW CAP.	A25715-15
227-7	15MMF, 500V DCW CAP.	A25715-15
227-8	15MMF, 500V DCW CAP.	A25715-15
228-1	60MMF, 500V DCW CAP.	C58495-600
228-2	60MMF, 500V DCW CAP.	C58495-600
228-3	60MMF, 500V DCW CAP.	C58495-600
228-4	60MMF, 500V DCW CAP.	C58495-600
228-5	60MMF, 500V DCW CAP.	C58495-600

REF. NO.	DESCRIPTION	DWG. NO.
228-6	60MMF, 500V DCW CAP.	C58495-60
228-7	60MMF, 500V DCW CAP.	C58495-60
228-8	60MMF, 500V DCW CAP.	C58495-60
229-1	IF COIL	AA104206
229-2	IF COIL	AA104206
229-3	IF COIL	AA104206
229-4	IF COIL	AA104206
229-5	IF COIL	AA104206
229-6	IF COIL	AA104206
229-7	IF COIL	AA104206
229-8	IF COIL	AA104206
230-1	.0068MFD, 500V DCW CAP.	A102967-6
230-2	.0068MFD, 500V DCW CAP.	A102967-6
230-3	.0068MFD, 500V DCW CAP.	A102967-6
230-4	.0068MFD, 500V DCW CAP.	A102967-6
230-5	.0068MFD, 500V DCW CAP.	A102967-6

Revised 1 A

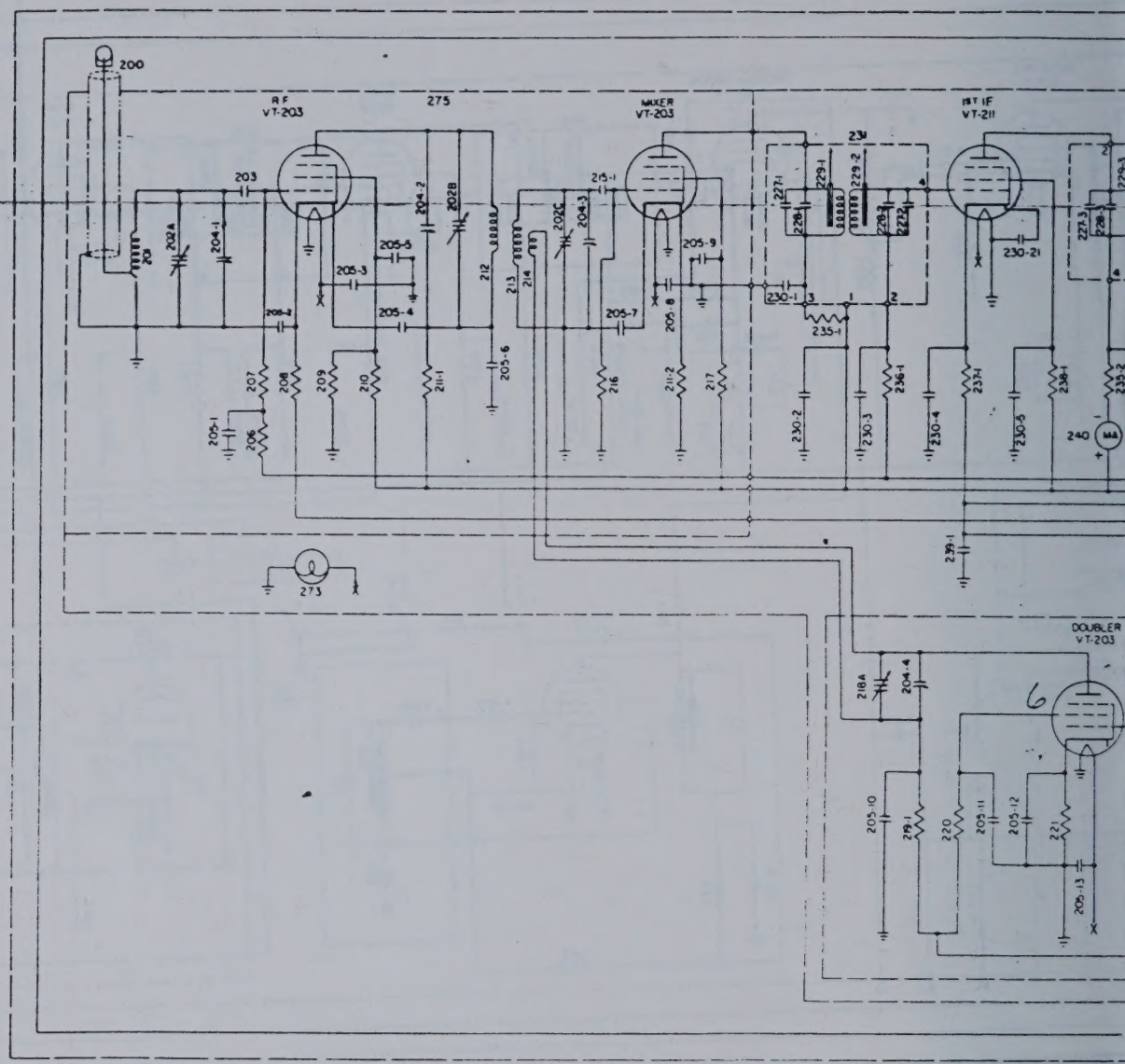

REF NO.	DESCRIPTION	DWG NO.	REF. NO.	DESCRIPTION	DWG. NO.	REF.
200	ANTENNA PLUG	C58585	205-8	680MMF, 500V DCW CAP. •	C58469-102	211-1
201	ANTENNA COIL	A105064	205-9	680MMF, 500V DCW CAP. •	C58469-102	211-2
202	GANG CAP (3 SEC)	L72799-2	205-10	680MMF, 500V DCW CAP. •	C58469-102	212
203	15MMF, 500V DCW CAP.	C58469-150	205-11	680MMF, 500V DCW CAP. •	C58469-102	213
204-1	TRIMMER CAP.	L72799-2	205-12	680MMF, 500V DCW CAP. •	C58469-102	214
204-2	TRIMMER CAP.	L72799-2	205-13	680MMF, 500V DCW CAP. •	C58469-102	215-1
204-3	TRIMMER CAP.	L72799-2	205-14	680MMF, 500V DCW CAP. •	C58469-102	215-2
204-4	TRIMMER CAP.	L72799-2	205-15	680MMF, 500V DCW CAP. •	C58469-102	216
204-5	TRIMMER CAP.	L72799-2	205-16	680MMF, 500V DCW CAP. •	C58469-102	217
205-1	680MMF, 500V DCW CAP. •	C58469-102	205-17	680MMF, 500V DCW CAP. •	C58469-102	218
205-2	680MMF, 500V DCW CAP. •	C58469-102	205-18	680MMF, 500V DCW CAP. •	C58469-102	219-1
205-3	680MMF, 500V DCW CAP. •	C58469-102	206	100,000 OHMS, ½W RES.	A102975-104	219-2
205-4	680MMF, 500V DCW CAP. •	C58469-102	207	560,000 OHMS, ½W RES.	A102975-564	220
205-5	680MMF, 500V DCW CAP. •	C58469-102	208	330 OHMS, ½W RES.	A102975-331	221
205-6	680MMF, 500V DCW CAP. •	C58469-102	209	120,000 OHMS, ½W RES.	A102975-124	222
205-7	680MMF, 500V DCW CAP. •	C58469-102	210	39,000 OHMS, ½W RES.	A18004-393	223

UNSATISFACTORY REPORT

FOR U. S. ARMY AIR FORCE PERSONNEL:

In the event of malfunctioning, unsatisfactory design, or unsatisfactory installation of any of the component units of this equipment, or if the material contained in this book is considered inadequate or erroneous, an Unsatisfactory Report, AAF Form No. 54, or a report in similar form shall be submitted in accordance with the provisions of Army Air Force Regulation No. 15-54, listing:

1. Station and organization.
2. Nameplate data (type number or complete nomenclature if nameplate is not attached to the equipment).
3. Date and nature of failure.
4. Airplane model and serial number.
5. Remedy used or proposed to prevent recurrence.
6. Handbook errors or inadequacies, if applicable.

FOR U. S. NAVY PERSONNEL:

Report of failure of any part of this equipment during its guaranteed life shall be made on Form N. Aer. 4112 "Report of Unsatisfactory or Defective Material" or a report in similar form and forwarded in accordance with the latest instructions of the Bureau of Aeronautics. In addition to other distribution required, one copy shall be furnished to the inspector of Naval Material (location to be specified) and the Bureau of Ships. Such reports of failure shall include:

1. Reporting Activity.
2. Nameplate data.
3. Date placed in service.
4. Part which failed.
5. Nature and cause of failure.
6. Replacement needed (yes-no).
7. Remedy used or proposed to prevent recurrence.

FOR BRITISH PERSONNEL:

Form 1022 procedure shall be used when reporting failure of radio equipment.

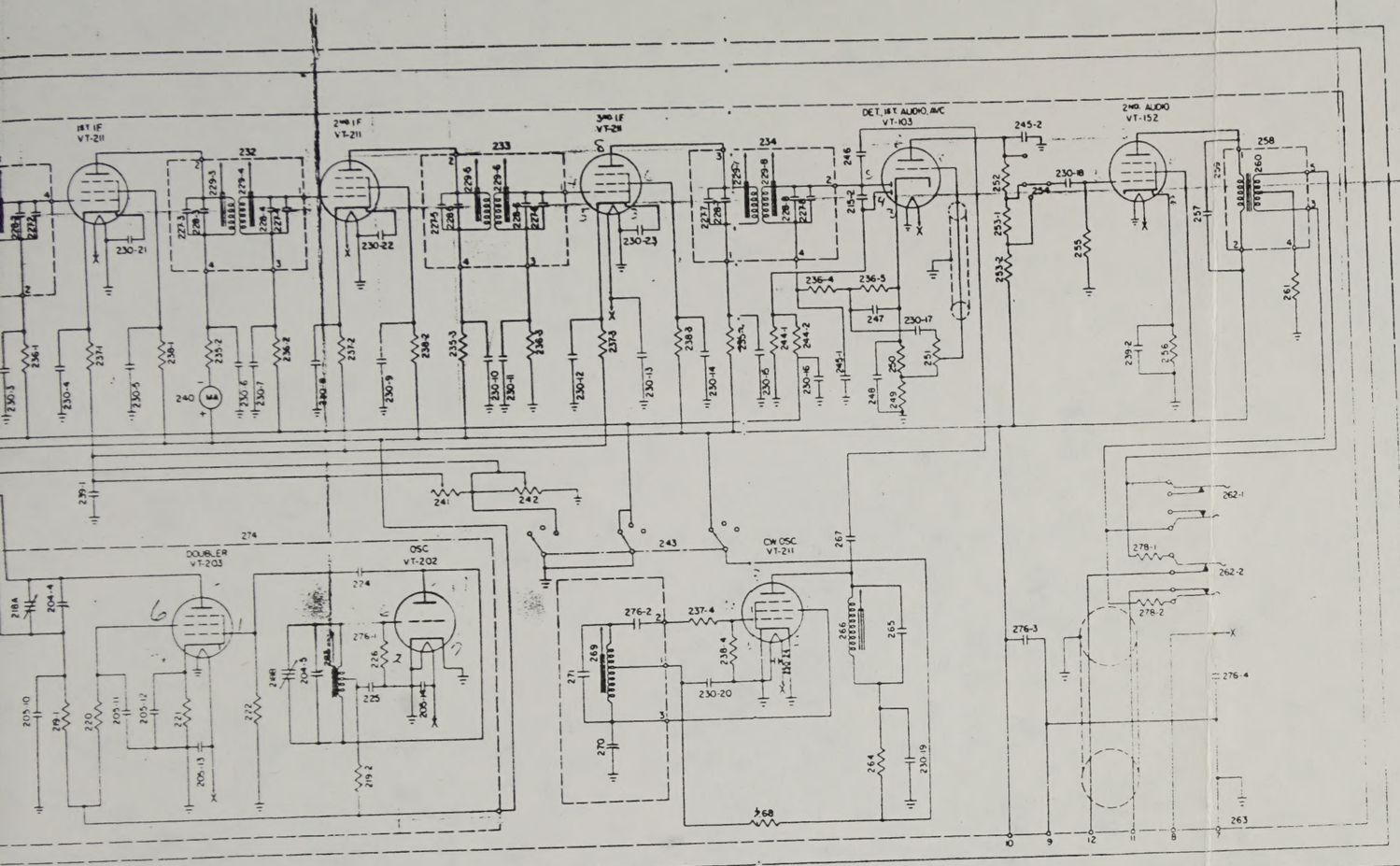

REF. NO.	DESCRIPTION	DWG. NO.
230-6	.0068MFD, 500V DCW CAP. **	A102967-8
230-7	.0068MFD, 500V DCW CAP. **	A102967-8
230-8	.0068MFD, 500V DCW CAP. **	A102967-8
230-9	.0068MFD, 500V DCW CAP. **	A102967-8
230-10	.0068MFD, 500V DCW CAP. **	A102967-8
230-11	.0068MFD, 500V DCW CAP. **	A102967-8
230-12	.0068MFD, 500V DCW CAP. **	A102967-8
230-13	.0068MFD, 500V DCW CAP. **	A102967-8
230-14	.0068MFD, 500V DCW CAP. **	A102967-8
230-15	.0068MFD, 500V DCW CAP. **	A102967-8
230-16	.0068MFD, 500V DCW CAP. **	A102967-8
230-17	.0068MFD, 500V DCW CAP. **	A102967-8
230-18	.0068MFD, 500V DCW CAP. **	A102967-8
230-19	.0068MFD, 500V DCW CAP. **	A102967-8
230-20	.0068MFD, 500V DCW CAP. **	A102967-8
230-21	.0068MFD, 500V DCW CAP. **	A102967-8
230-22	.0068MFD, 500V DCW CAP. **	A102967-8
230-23	.0068MFD, 500V DCW CAP. **	A102967-8
231	1ST I.F. ASSEM.	AL73530-1
232	2ND I.F. ASSEM.	AL73531-1
233	3RD I.F. ASSEM.	AL73026-4
234	4TH I.F. ASSEM.	AL73028-2
235-1	1,000 OHMS, ½W RES.	A18001-102
235-2	1,000 OHMS, ½W RES.	A18001-102
235-3	1,000 OHMS, ½W RES.	A18001-102
235-4	1,000 OHMS, ½W RES.	A18001-102
236-1	100,000 OHMS, ½W RES.	A18001-104
236-2	100,000 OHMS, ½W RES.	A18001-104
236-3	100,000 OHMS, ½W RES.	A18001-104
236-4	100,000 OHMS, ½W RES.	A18001-104
236-5	100,000 OHMS, ½W RES.	A18001-104
237-1	220 OHMS, ½W RES.	A18001-221
237-2	220 OHMS, ½W RES.	A18001-221
237-3	220 OHMS, ½W RES.	A18001-221
237-4	220 OHMS, ½W RES.	A18001-221
238-1	47,000 OHMS ½W RES.	A18001-473
238-2	47,000 OHMS ½W RES.	A18001-473
238-3	47,000 OHMS ½W RES.	A18001-473
238-4	47,000 OHMS ½W RES.	A18001-473
239-1	1.0 MFD, 100V DCW CAP.	A104484
239-2	1.0 MFD, 100V DCW CAP.	A104484
240	0-10 MILLAMMETER	A104194-4
241	300 OHMS, THES. CONTROL	A105022
242	3000 OHMS, GAIN CONTROL	C58961
243	SELECTOR SWITCH	C58583
244-1	1 MEGOHM, ½W RES.	A102975-105
244-2	1 MEGOHM, ½W RES.	A102975-105
245-1	330 MMF, 500V DCW CAP.	C58469-331
245-2	330 MMF, 500V DCW CAP.	C58469-331
246	1.8 MMF, 500V DCW CAP.	C56336-18

REF. NO.	DESCRIPTION	DWG. NO.
247	220 MMF, 500V DCW CAP.	C58469-221
248	0.1 MFD, 400V DCW CAP.	A18015-104
249	18,000 OHMS, ½W RES.	A18001-183
250	2,200 OHMS, ½W RES.	A18001-222
251	1 MEG, VOLUME CONTROL	A102616
252	68,000 OHMS, ½W RES.	A102975-683
253-1	33,000 OHMS, ½W RES.	A102975-333
253-2	33,000 OHMS, ½W RES.	A102975-333
254	ATTENUATOR SWITCH	C58584
255	330,000 OHMS, ½W RES.	A102975-334
256	560 OHMS, 2W RES.	RC41BE561J
257	.0068 MFD, 500V DCW CAP.	A25714-7
258	OUTPUT TRANS.	A103058
259	PRI. OUTPUT TRANS.	A103058
260	SEC. OUTPUT TRANS.	A103058
261	4700 OHMS, ½W RES.	A18001-472
262-1	PHONE JACK	A103533
262-2	PHONE JACK	A103533
263	JONES PLUG	A105106
264	4700 OHMS, ½W RES.	A18004-472
265	100 MMF, 500V DCW CAP.	C56317-101
266	C.W. OSC. PLATE COIL	AA106068
267	4.7 MMF, 500V DCW CAP.	C58469-47
268	47,000 OHMS, ½W RES.	A18004-473
269	C.W. OSC. GRID COIL	A105036-1
270	VARIABLE CAP.	A105041
271	390 MMF, 500V DCW CAP.	C56317-391
272	C.W. OSC. COIL ASSEM.	C58590-1
273	DIAL LIGHT ASSEM.	A104910
274	H.F. OSC. ASSEMBLY	AN91052-1
275	R.F. ASSEMBLY	AN91050-1
276-1	.001MFD, 500V DCW CAP.	C58469-102
276-2	.001MFD, 500V DCW CAP.	C58469-102
276-3	.001MFD, 500V DCW CAP.	C58469-102
276-4	.001MFD, 500V DCW CAP.	C58469-102
278-1	330 OHMS, 1W RES.	RC30BE331K
278-2	330 OHMS, 1W RES.	RC30BE331K
VT-103	DET., 1ST AUDIO, AVC	
VT-152	2ND AUDIO	
VT-202	H.F. OSC.	
VT-203	R.F. AMPLIFIER	
VT-203	MIXER	
VT-203	DOUBLER	
VT-211	1ST I.F.	
VT-211	2ND I.F.	
VT-211	3RD I.F.	
VT-211	C.W. OSC.	

	DWG. NO.
CAP. *	C58469-102
CAP. *	C58469-102
CAP. *	C58469-102
CAP. *	C58469-102
CAP. *	C58469-102
CAP. *	C58469-102
CAP. *	C58469-102
CAP. *	C58469-102
CAP. *	C58469-102
CAP. *	C58469-102
RES.	A102975-104
RES.	A102975-564
-	A102975-331
RES.	A102975-124
ES.	A18004-393

REF. NO.	DESCRIPTION	DWG. NO.
211-1	1,000 OHMS, ½W RES.	A102975-102
211-2	1,000 OHMS, ½W RES.	A102975-102
212	R.F. PLATE COIL	A105065
213	MIXER GRID COIL	A105066
214	DOUBLER PLATE COIL	A104311
215-1	47MMF, 500V DCW CAP.	C58469-470
215-2	47MMF, 500V DCW CAP.	C58469-470
216	1.8 MEGOHMS ½W RES.	A102975-185
217	270,000 OHMS ½W RES.	A102975-274
218	GANG CAP. (2 SEC)	L72798-2
219-1	4,700 OHMS ½W RES.	A102975-472
219-2	4,700 OHMS ½W RES.	A102975-472
220	56,000 OHMS ½W RES.	A102975-563
221	560 OHMS ½W RES.	A102975-561
222	27,000 OHMS ½W RES.	A102975-273
223	H.F. OSC. COIL	A105061

REF. NO.	DESCRIPTION	DWG. NO.
224	27MMF, 500V DCW CAP.	C58469-270
225	150MMF, 500V DCW CAP.	C58469-151
226	47,000 OHMS ½W RES.	A102975-473
227-1	15MMF, 500V DCW CAP.	A25715-15
227-2	15MMF, 500V DCW CAP.	A25715-15
227-3	15MMF, 500V DCW CAP.	A25715-15
227-4	15MMF, 500V DCW CAP.	A25715-15
227-5	15MMF, 500V DCW CAP.	A25715-15
227-6	15MMF, 500V DCW CAP.	A25715-15
227-7	15MMF, 500V DCW CAP.	A25715-15
227-8	60MMF, 500V DCW CAP.	C58495-600
228-1	60MMF, 500V DCW CAP.	C58495-600
228-2	60MMF, 500V DCW CAP.	C58495-600
228-3	60MMF, 500V DCW CAP.	C58495-600
228-4	60MMF, 500V DCW CAP.	C58495-600
228-5	60MMF, 500V DCW CAP.	C58495-600

REF. NO.	DESCRIPTION	DWG. NO.
228-6	60MMF, 500V DCW CAP.	C58495-600
228-7	60MMF, 500V DCW CAP.	C58495-600
228-8	60MMF, 500V DCW CAP.	C58495-600
229-1	IF COIL	AA104206-1
229-2	IF COIL	AA104206-1
229-3	IF COIL	AA104206-1
229-4	IF COIL	AA104206-1
229-5	IF COIL	AA104206-1
229-6	IF COIL	AA104206-1
229-7	IF COIL	AA104206-1
229-8	IF COIL	AA104206-1
230-1	.0068MFD, 500V DCW CAP. **	A102967-8
230-2	.0068MFD, 500V DCW CAP. **	A102967-8
230-3	.0068MFD, 500V DCW CAP. **	A102967-8
230-4	.0068MFD, 500V DCW CAP. **	A102967-8
230-5	.0068MFD, 500V DCW CAP. **	A102967-8

* ANY VALUE FROM 1000 MMF TO 600 MMF. IS ACCEPTABLE.

** ANY VALUE FROM .01MFD TO .006 MFD IS ACCEPTABLE.

Figure 22 – Radio Receiver BC-639-A, Schematic Diagram

Revised 1 April 1956

UNSATISFACTORY REPORT

FOR U. S. ARMY AIR FORCE PERSONNEL:

In the event of malfunctioning, unsatisfactory design, or unsatisfactory installation of any of the component units of this equipment, or if the material contained in this book is considered inadequate or erroneous, an Unsatisfactory Report, AAF Form No. 54, or a report in similar form shall be submitted in accordance with the provisions of Army Air Force Regulation No. 15-54, listing:

1. Station and organization.
2. Nameplate data (type number or complete nomenclature if nameplate is not attached to the equipment).
3. Date and nature of failure.
4. Airplane model and serial number.
5. Remedy used or proposed to prevent recurrence.
6. Handbook errors or inadequacies, if applicable.

FOR U. S. NAVY PERSONNEL:

Report of failure of any part of this equipment during its guaranteed life shall be made on Form N. Aer. 4112 "Report of Unsatisfactory or Defective Material" or a report in similar form and forwarded in accordance with the latest instructions of the Bureau of Aeronautics. In addition to other distribution required, one copy shall be furnished to the inspector of Naval Material (location to be specified) and the Bureau of Ships. Such reports of failure shall include:

1. Reporting Activity.
2. Nameplate data.
3. Date placed in service.
4. Part which failed.
5. Nature and cause of failure.
6. Replacement needed (yes-no).
7. Remedy used or proposed to prevent recurrence.

FOR BRITISH PERSONNEL:

Form 1022 procedure shall be used when reporting failure of radio equipment.

TABLE OF CONTENTS

Paragraph *Page*

SECTION I GENERAL DESCRIPTION

1. General 1
2. Components 2
3. Antenna Requirements 3
4. Power Requirements 3
5. Table Mounted in Case CS-134, Navy Adaptation 4

SECTION II INSTALLATION AND ADJUSTMENT

6. Installation 5
7. Preparation for Use 6

SECTION III OPERATION

8. General 7
9. Tuning Receiver to A Desired Frequency with Frequency Meter BC-638-A 7
10. Tuning Receiver to A Desired Frequency without using Frequency Meter BC-638-A 7
11. Use of Controls after Receiver is Tuned to Desired Frequency 7
12. Use of the Tuning Meter 8

SECTION IV MECHANICAL AND ELECTRICAL CHARACTERISTICS

13. General 9
14. Circuits of the Radio Frequency Amplifier 10
15. Circuit of High Frequency Oscillator 10
16. Circuit of the Doubler Stage 11
17. Circuit of the Mixer Stage 11
18. Circuit of the Intermediate Frequency Amplifier Stages 11
19. Circuit of the Second Detector, First Audio, A.V.C. Stage 14
20. Circuit of the C-W Oscillator Stage 14
21. Circuit of the Second Audio Stage 15
22. Shield Cans 15
23. Function of Operating Controls 15
    a. Main Tuning Control 15
    b. Threshold Sensitivity 15
    c. R.F. Gain Increase 15
    d. C.W. and Manual, Manual, A.V.C. 16
    e. Audio Gain Increase 16
    f. Attenuation 16
    g. C.W. Tone Control 16
    h. Monitor Jack 16
    i. Line Jack 16
    j. Tuning Meter 16

Paragraph *Page*

SECTION V MAINTENANCE

24. General 17
25. Operational Inspection 18
26. Disassembly of Unit 18
a. Power and Antenna Connections 18
b. To Remove Radio Receiver BC-639-A from Standard Rack Mounting 18
c. To Remove Dust Cover from the Chassis 18
d. To Remove Electrical Assemblies from Chassis 18
27. Reassembly of Unit 22
a. To Replace Electrical Assemblies on Chassis 22
b. To Replace Dust Cover on Chassis 24
c. To Replace Radio Receiver BC-639-A in Standard Rack Mounting 24
d. Power and Antenna Connections 24
28. Routine Inspection and Overhaul 24
29. Inspection after Overhaul of Equipment 25
30. Lubrication 25
31. Trouble Location and Remedy of Faults 25
32. Voltage Measurements 29
33. Typical Vacuum Tube-Socket Resistance 31
34. Alignment Using Signal Generator 32
a. Intermediate Frequency Amplifier Alignment 32
b. Beat Frequency Oscillator Alignment 33
c. Gear and Tuning Capacitor Alignment 34
d. Radio Frequency and High Frequency Oscillator Alignment 34
e. Threshold Sensitivity Control Adjustment 36
35. Alignment Using Test Equipment IE-19-A 36
36. Alignment Using Frequency Meter BC-638-A 36
37. Overall Performance Tests 37
a. General 37
b. Standard Test Conditions 37
c. Methods of Measurement 37
38. Output Power Measurements 39
39. Replacing Defective Components 40
40. Vacuum Tube Replacement 41
41. Pilot Bulb Replacement 42
SECTION VI—Supplementary Data (Deleted)
SECTION VII—Table of Replaceable Parts 45

LIST OF ILLUSTRATIONS

Figure 1. Radio Receiver BC-639-A, Front View x

Figure 2. Radio Receiver BC-639-A, Rear View, Dust Cover in Place 3

Figure 3. Radio Receiver BC-639-A, (Navy Adaptation) Mounted in Case CS-134 4

Figure 4. Radio Receiver BC-639-A, Socket Connections 5

Figure 5. Case CS-134 5

Figure 6. Radio Receiver BC-639-A, Block Diagram 9

Figure 7. Intermediate Frequency Response Curves 12

Figure 8. Radio Receiver BC-639-A, Top Front Oblique, R.F. and Oscillator Assembly 17

Figure 9. Radio Receiver BC-639-A, Left Side View, Oscillator Assembly 19

Figure 10. Radio Receiver BC-639-A, Right Side View, R.F. Assembly 20

Figure 11. Radio Receiver BC-639-A, Rear View, Dust Cover Removed 21

Figure 12. Radio Receiver BC-639-A, Dial Drive Gears 22

Figure 13. Radio Receiver BC-639-A, Left Side View 22

Figure 14. Radio Receiver BC-639-A, Right Side View 23

Figure 15. Radio Receiver BC-639-A, Front Oblique, R.F. and Oscillator 24

Figure 16. Radio Receiver BC-639-A, Rear Oblique, Top View 26

Figure 17. Radio Receiver BC-639-A, Left Oblique, Bottom View 28

Figure 18. Radio Receiver BC-639-A, Rear Oblique, Bottom View 30

Figure 19. Radio Receiver BC-639-A, Top View, R.F. and Oscillator Assembly 35

Figure 20. Radio Receiver BC-639-A, Top Rear Oblique, R.F. and Oscillator Assembly 40

Figure 21. Radio Receiver BC-639-A, Vacuum Tube Base 41

Figure 22. Radio Receiver BC-639-A, Schematic Diagram 62A-62B

Figure 23. Radio Receiver BC-639-A, R.F. and Oscillator Wiring Diagram 63

Figure 24. Radio Receiver BC-639-A, Wiring Diagram 65-66

DESTRUCTION OF ABANDONED MATERIEL IN THE COMBAT ZONE

In case it should become necessary to prevent the capture of this equipment and when ordered to do so, DESTROY IT SO THAT NO PART OF IT CAN BE SALVAGED, RECOGNIZED OR USED BY THE ENEMY. BURN ALL PAPERS AND BOOKS.

Means:—

1. Explosives, when provided.
2. Hammers, axes, sledges or whatever heavy object is readily available.
3. Burning by means of incendiaries such as gasoline, oil, paper or wood.
4. Grenades and shots from available arms.
5. Where possible, and when time permits, bury all debris or dispose of it in streams or other bodies of water.

Procedure:—

1. Obliterate all identifying marks. Destroy nameplates and circuit labels.
2. Demolish all panels, castings, switch-and instrument-boards.
3. Destroy all controls, switches, relays, connections and meters.
4. Rip out all wiring in electrical equipment. Smash gas, oil and water cooling systems in gas-engine generators, etc.
5. Smash every electrical or mechanical part whether rotating, moving or fixed.
6. Break up all operating instruments such as keys, phones, microphones, etc.
7. Destroy all classes of carrying cases, straps, and containers, etc.

SPECIAL NOTICE

The most common fault with field radio equipment is loose or bad connections. Look for this *first*. The second most common repair needed is from bad adjustments by unqualified operating personnel. There are almost no internal adjustments or repairs you should do on this unit. Use a spare unit when you can get it and send for your experienced repairman. His experience and equipment will save the extra time.

A WRONG INTERNAL ADJUSTMENT ON EQUIPMENT OPERATING AT THESE FREQUENCIES MAY MAKE IT NEED A FACTORY REPAIR JOB WHILE A SIMPLE REPAIR JOB WOULD HAVE BEEN ENOUGH.

SAFETY NOTICE

THIS EQUIPMENT USES HIGH VOLTAGES WHICH ARE DANGEROUS TO LIFE. YOU MUST ALWAYS OBSERVE ALL SAFETY RULES.

FIRST AID

PERSONNEL ENGAGED IN INSTALLING, OPERATING AND REPAIRING THIS OR SIMILAR EQUIPMENT MUST KNOW THESE RULES. EVERY RADIOMAN MUST BE READY TO GIVE FIRST AID AND SO PREVENT AVOIDABLE LOSS OF LIFE. YOUR LIFE MAY DEPEND ON THIS.

Do These Three Things First in Any Emergency

1. Send for a doctor or carry the victim to a doctor.
2. Keep victim warm, quiet and flat on his back.
3. If breathing has stopped apply artificial respiration. Stop all serious bleeding.

THE PRONE PRESSURE METHOD OF ARTIFICIAL RESPIRATION IF DUE TO ELECTRIC SHOCK

1. PROTECT YOURSELF with DRY insulating material.
2. BREAK THE CIRCUIT by opening the power switch or pulling the victim free of the live conductor. DON'T touch VICTIM WITH YOUR BARE HANDS UNTIL CIRCUIT IS BROKEN.
3. SPREAD DRY BLANKET ON THE GROUND, and roll victim to center of blanket with his arms above his head, so that he lies FACE DOWN on blanket.
4. BEND ONE OF THE VICTIM'S ARMS at the elbow and rest victim's cheek on the back of his hand.
5. REMOVE FALSE TEETH, gum, candy, tobacco, food, etc., from his mouth.
6. LOOSEN ALL TIGHT CLOTHING, as belts or collars.
7. COVER VICTIM LOOSELY by wrapping the ends of blanket around him.
8. STRADDLE VICTIM'S thighs.
9. PUT YOUR PALMS ON VICTIM'S BACK so that the little fingers of each hand just touch victim's lowest ribs.

10. KEEP YOUR ARMS STIFF AND STRAIGHT and swing your body forward, let your weight bear down on him.

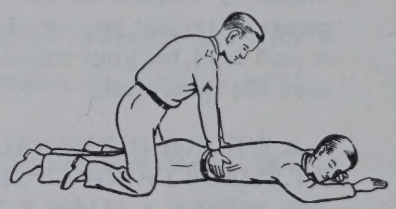

11. DO NOT PUSH OR USE FORCE.
12. SWING BACK AT ONCE TO RELIEVE pressure.

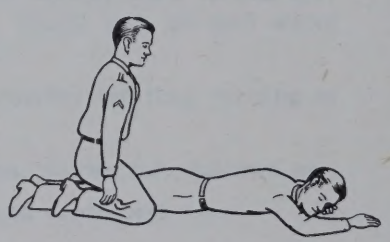

13. KEEP REPEATING.
14. Keep this up with steady rhythm until victim regains consciousness or is pronounced dead by doctor.
15. CONTINUE ARTIFICIAL RESPIRATION even after victim begins to breathe, and until he becomes conscious.

16. IF BREATHING STOPS AGAIN, continue artificial respiration at once.
17. DO NOT GIVE UP HOPE. Four hours or more of steady artificial respiration may be needed before he comes to.
18. NEVER TRY TO FORCE LIQUIDS down an unconscious person's throat. He will drown.
19. ALWAYS WAIT UNTIL CONSCIOUSNESS RETURNS before giving liquid stimulants.
20. STIMULANTS THAT CAN BE USED ARE: Hot black coffee. Strong hot tea. Aromatic spirits of ammonia, (one teaspoonful to a glass of water).
21. GIVE ONLY ONE STIMULANT, which should be sipped slowly.
22. Don't give ALCOHOLIC DRINKS, not good unless absolutely necessary.
23. WHEN VICTIM HAS RETURNED TO CONSCIOUSNESS, let him lie quietly where he is for at least one hour, see that he is well covered and has no worry.
24. IF YOU CAN, CARRY HIM TO A DOCTOR.

WOUNDS

Neglected wounds can have serious results. Any break in the skin is a wound. Paint small cuts and scratches at once with TINCTURE OF IODINE. Keep cuts and wounds CLEAN but DO NOT use Tincture of Iodine on them. Wash AROUND and AWAY FROM the wound with ordinary soap and water, if no other antiseptic is at hand. Other antiseptics for deep wounds are: Violet gentian, Potassium permanganate, Tincture of Merthiolate, or ordinary baking soda and water. Cover the wound with a sterile gauze dressing and hold in place with adhesive tape or a strip of gauze.

In cases of serious bleeding, when an artery has been cut, firm pressure is necessary to stop the flow of blood. Artery blood is BRIGHT RED and comes in SPURTS, with each heart beat. Blood from a vein is DARK RED and flows steadily. Pressure is not often needed for venous bleeding.

Pressure is applied between the WOUND AND THE HEART, to stop ARTERIAL BLEEDING. Apply pressure BELOW the wound, or AWAY FROM THE HEART to stop BLEEDING VEINS.

Pressure is best applied and maintained by means of a strip of cloth, bandage, tied ABOVE the wound. Tie a simple, double knot in the cloth and put a strong stick in the loop then tighten the knot by pulling the ends of the cloth. With stick held firmly in place, twist it, until bleeding stops.

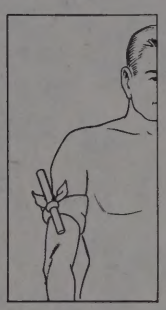

DO NOT keep pressure on longer than 15 minutes at a time.

IF BLEEDING CONTINUES after taking off pressure, allow blood to flow for 30 to 60 seconds and then re-apply pressure. Continue until bleeding stops.

AFTER BLEEDING HAS STOPPED, cover wound with a sterile dressing. DON'T TOUCH WOUND OR DRESSING WITH DIRTY HANDS!

Keep victim FLAT ON HIS BACK, AND WELL COVERED. DON'T LET HIM SEE HIS WOUND. Keep his thoughts from himself.

Get a DOCTOR AS SOON AS YOU CAN.

BURNS

Burns from contact with high voltage electricity, fire, or friction, need care at once.

1. Apply AT ONCE any one of these liberally:—
   a. Tannic acid jelly.
   b. Butesin picrate.
   c. Paste made with baking soda and water.
   d. Very strong, cool tea.
2. Cover with STERILE GAUZE.
3. If clothing sticks to burn, DON'T REMOVE IT.
4. Keep victim WELL COVERED and FLAT ON HIS BACK. Soothe and reassure him.
5. GET A DOCTOR AS SOON AS YOU CAN.

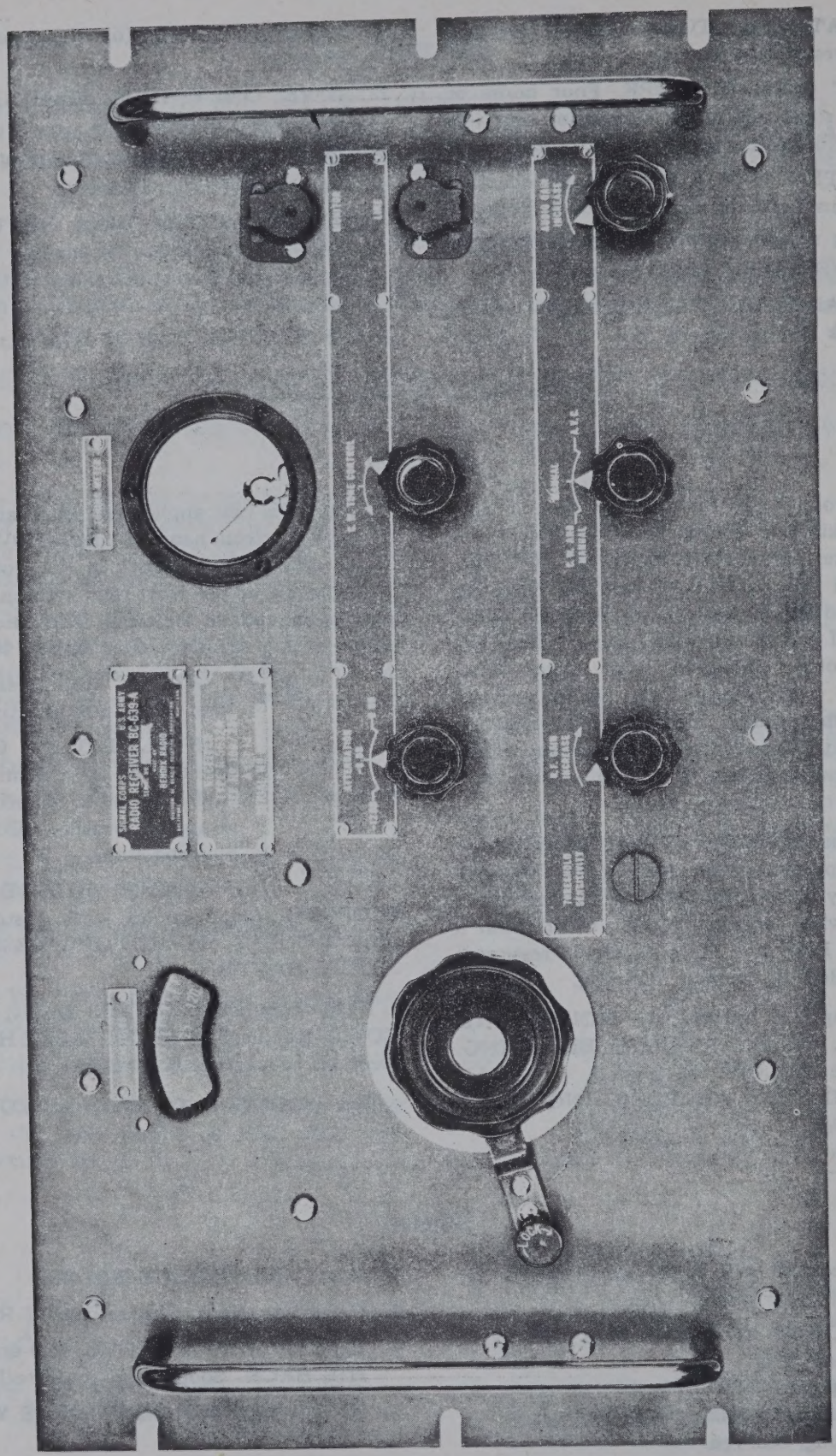

Figure 1 — Radio Receiver BC-639-A, Front View

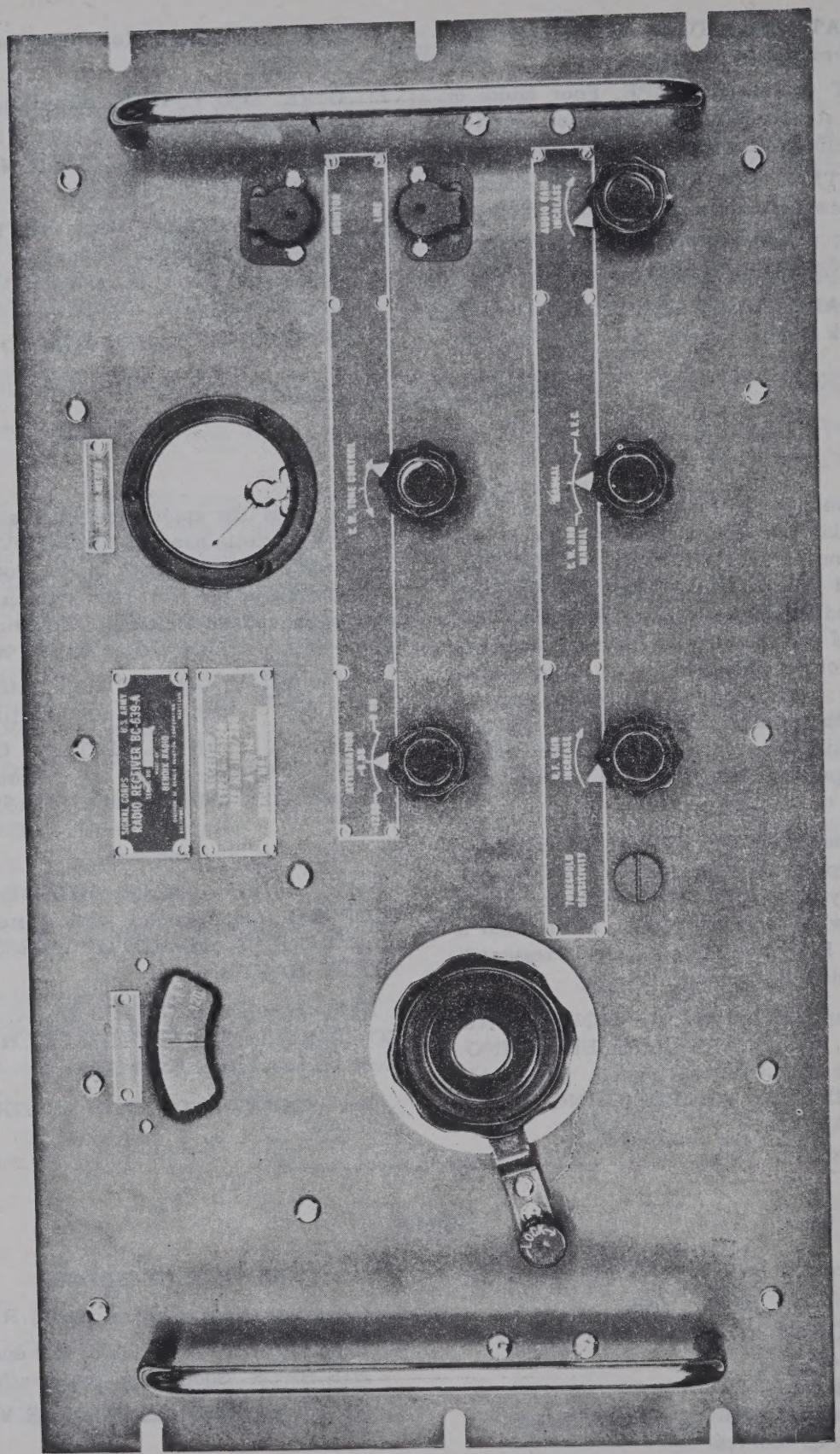

Figure 1 — Radio Receiver BC-639-A, Front View

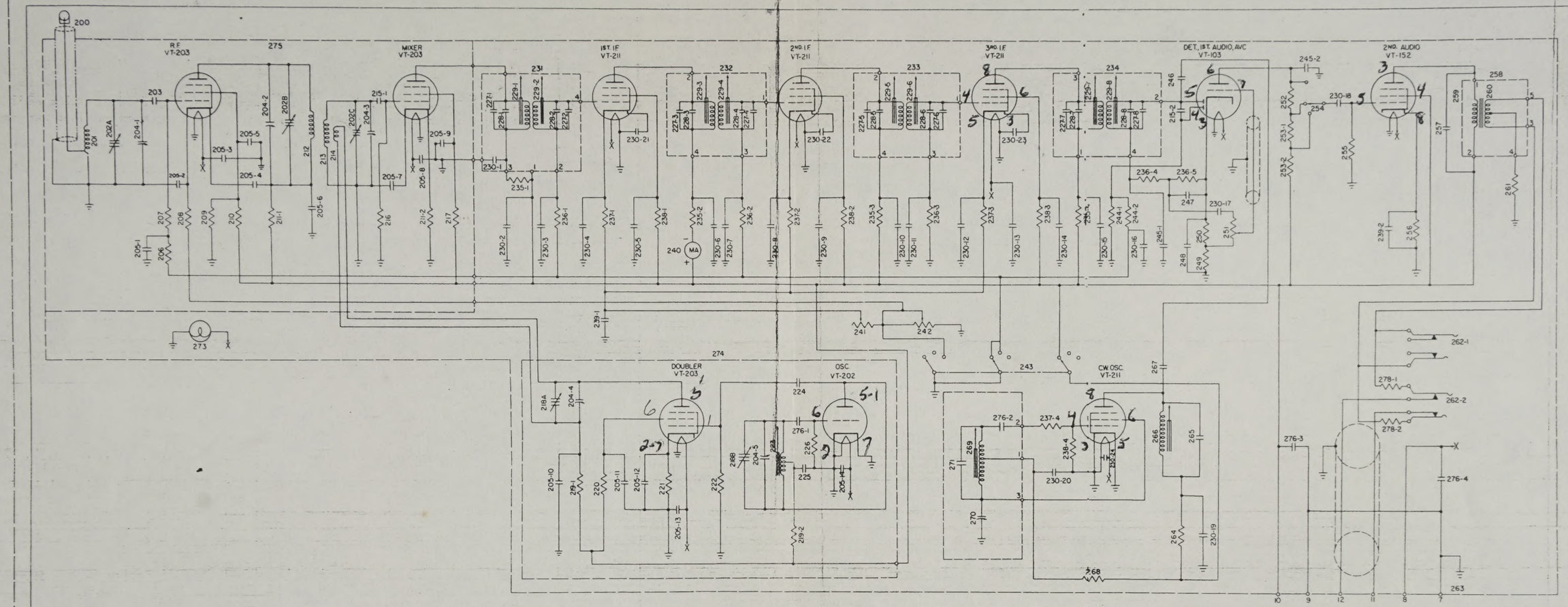

REF. NO.
230-6
230-7
230-8
230-9
230-10
230-11
230-12
230-13
230-14
230-15
230-16
230-17
230-18
230-19
230-20
230-21
230-22
230-23
231
232
233
234
235-1
235-2
235-3
235-4
236-1
236-2
236-3
236-4
236-5
237-1
237-2
237-3
237-4
238-1
238-2
238-3
238-4
239-1
239-2
240
241
242
243
244-1
244-2
245-1
245-2
246

REF NO.	DESCRIPTION	DWG NO.
200	ANTENNA PLUG	C58585
201	ANTENNA COIL	A105064
202	GANG CAP (3 SEC)	L72799-2
203	15MMF, 500V DCW CAP.	C58469-150
204-1	TRIMMER CAP.	L72799-2
204-2	TRIMMER CAP.	L72799-2
204-3	TRIMMER CAP.	L72799-2
204-4	TRIMMER CAP.	L72799-2
204-5	TRIMMER CAP.	L72799-2
205-1	680MMF, 500V DCW CAP. •	C58469-102
205-2	680MMF, 500V DCW CAP. •	C58469-102
205-3	680MMF, 500V DCW CAP. •	C58469-102
205-4	680MMF, 500V DCW CAP. •	C58469-102
205-5	680MMF, 500V DCW CAP. •	C58469-102
205-6	680MMF, 500V DCW CAP. •	C58469-102
205-7	680MMF, 500V DCW CAP. •	C58469-102

REF. NO.	DESCRIPTION	DWG. NO.
205-8	680MMF, 500V DCW CAP. •	C58469-102
205-9	680MMF, 500V DCW CAP. •	C58469-102
205-10	680MMF, 500V DCW CAP. •	C58469-102
205-11	680MMF, 500V DCW CAP. •	C58469-102
205-12	680MMF, 500V DCW CAP. •	C58469-102
205-13	680MMF, 500V DCW CAP. •	C58469-102
205-14	680MMF, 500V DCW CAP. •	C58469-102
205-15	680MMF, 500V DCW CAP. •	C58469-102
205-16	680MMF, 500V DCW CAP. •	C58469-102
205-17	680MMF, 500V DCW CAP. •	C58469-102
205-18	680MMF, 500V DCW CAP. •	C58469-102
206	100,000 OHMS, ½W RES.	A102975-104
207	560,000 OHMS, ½W RES.	A102975-564
208	330 OHMS, ½W RES.	A102975-331
209	120,000 OHMS, ½W RES.	A102975-124
210	39,000 OHMS, ½W RES.	A18004-393

REF. NO.	DESCRIPTION	DWG. NO.
211-1	1,000 OHMS, ½W RES.	A102975-102
211-2	1,000 OHMS, ½W RES.	A102975-102
212	R.F. PLATE COIL	A105065
213	MIXER GRID COIL	A105066
214	DOUBLER PLATE COIL	A104311
215-1	47MMF, 500V DCW CAP.	C58469-470
215-2	47MMF, 500V DCW CAP.	C58469-470
216	1.8 MEGOHMS ½W RES.	A102975-185
217	270,000 OHMS ½W RES.	A102975-274
218	GANG CAP. (2 SEC)	L72798-2
219-1	4,700 OHMS ½W RES.	A102975-472
219-2	4,700 OHMS ½W RES.	A102975-472
220	56,000 OHMS ½W RES.	A102975-563
221	560 OHMS ½W RES.	A102975-561
222	27,000 OHMS ½W RES.	A102975-273
223	H.F. OSC. COIL	A105061

REF. NO.	DESCRIPTION	DWG. NO.
224	27MMF, 500V DCW CAP.	C58469-270
225	150MMF, 500V DCW CAP.	C58469-151
226	47,000 OHMS ½W RES.	A102975-473
227-1	15MMF, 500V DCW CAP.	A25715-15
227-2	15MMF, 500V DCW CAP.	A25715-15
227-3	15MMF, 500V DCW CAP.	A25715-15
227-4	15MMF, 500V DCW CAP.	A25715-15
227-5	15MMF, 500V DCW CAP.	A25715-15
227-6	15MMF, 500V DCW CAP.	A25715-15
227-7	15MMF, 500V DCW CAP.	A25715-15
227-8	15MMF, 500V DCW CAP.	A25715-15
228-1	60MMF, 500V DCW CAP.	C58495-600
228-2	60MMF, 500V DCW CAP.	C58495-600
228-3	60MMF, 500V DCW CAP.	C58495-600
228-4	60MMF, 500V DCW CAP.	C58495-600
228-5	60MMF, 500V DCW CAP.	C58495-600

REF. NO.	DESCRIPTION	DWG. NO.
228-6	60MMF, 500V DCW CAP.	C58495-600
228-7	60MMF, 500V DCW CAP.	C58495-600
228-8	60MMF, 500V DCW CAP.	C58495-600
229-1	IF COIL	AA104206-1
229-2	IF COIL	AA104206-1
229-3	IF COIL	AA104206-1
229-4	IF COIL	AA104206-1
229-5	IF COIL	AA104206-1
229-6	IF COIL	AA104206-1
229-7	IF COIL	AA104206-1
229-8	IF COIL	AA104206-1
230-1	.0068MFD, 500V DCW CAP. ••	A102967-8
230-2	.0068MFD, 500V DCW CAP. ••	A102967-8
230-3	.0068MFD, 500V DCW CAP. ••	A102967-8
230-4	.0068MFD, 500V DCW CAP. ••	A102967-8
230-5	.0068MFD, 500V DCW CAP. ••	A102967-8

Revised 1 April 1956

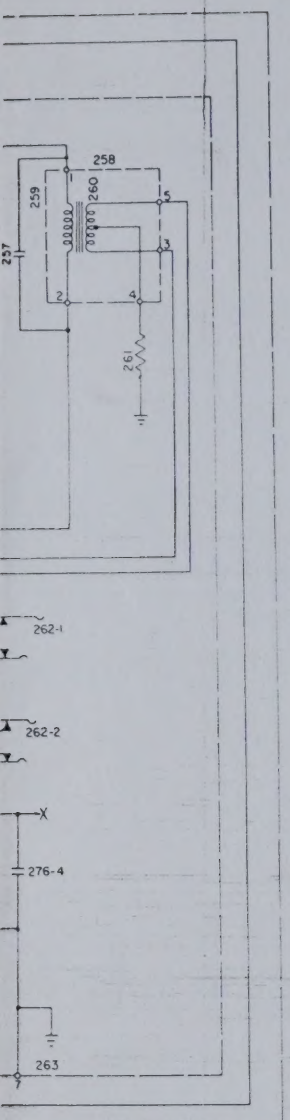

REF. NO.	DESCRIPTION	DWG. NO.
230-6	.0068MFD, 500V DCW CAP. **	A102967-8
230-7	.0068MFD, 500V DCW CAP. **	A102967-8
230-8	.0068MFD, 500V DCW CAP. **	A102967-8
230-9	.0068MFD, 500V DCW CAP. **	A102967-8
230-10	.0068MFD, 500V DCW CAP. **	A102967-8
230-11	.0068MFD, 500V DCW CAP. **	A102967-8
230-12	.0068MFD, 500V DCW CAP. **	A102967-8
230-13	.0068MFD, 500V DCW CAP. **	A102967-8
230-14	.0068MFD, 500V DCW CAP. **	A102967-8
230-15	.0068MFD, 500V DCW CAP. **	A102967-8
230-16	.0068MFD, 500V DCW CAP. **	A102967-8
230-17	.0068MFD, 500V DCW CAP. **	A102967-8
230-18	.0068MFD, 500V DCW CAP. **	A102967-8
230-19	.0068MFD, 500V DCW CAP. **	A102967-8
230-20	.0068MFD, 500V DCW CAP. **	A102967-8
230-21	.0068MFD, 500V DCW CAP. **	A102967-8
230-22	.0068MFD, 500V DCW CAP. **	A102967-8
230-23	.0068MFD, 500V DCW CAP. **	A102967-8
231	1ST I.F. ASSEM.	AL73530-1
232	2ND I.F. ASSEM.	AL73531-1
233	3RD I.F. ASSEM.	AL73026-4
234	4TH I.F. ASSEM.	AL73028-2
235-1	1,000 OHMS, $\frac{1}{4}$W RES.	A18001-102
235-2	1,000 OHMS, $\frac{1}{4}$W RES.	A18001-102
235-3	1,000 OHMS, $\frac{1}{4}$W RES.	A18001-102
235-4	1,000 OHMS, $\frac{1}{4}$W RES.	A18001-102
236-1	100,000 OHMS, $\frac{1}{4}$W RES.	A18001-104
236-2	100,000 OHMS, $\frac{1}{4}$W RES.	A18001-104
236-3	100,000 OHMS, $\frac{1}{4}$W RES.	A18001-104
236-4	100,000 OHMS, $\frac{1}{4}$W RES.	A18001-104
236-5	100,000 OHMS, $\frac{1}{4}$W RES.	A18001-104
237-1	220 OHMS, $\frac{1}{4}$W RES.	A18001-221
237-2	220 OHMS, $\frac{1}{4}$W RES.	A18001-221
237-3	220 OHMS, $\frac{1}{4}$W RES.	A18001-221
237-4	220 OHMS, $\frac{1}{4}$W RES.	A18001-221
238-1	47,000 OHMS $\frac{1}{4}$W RES.	A18001-473
238-2	47,000 OHMS $\frac{1}{4}$W RES.	A18001-473
238-3	47,000 OHMS $\frac{1}{4}$W RES.	A18001-473
238-4	47,000 OHMS $\frac{1}{4}$W RES.	A18001-473
239-1	1.0 MFD, 100V DCW CAP.	A104484
239-2	1.0 MFD, 100V DCW CAP.	A104484
240	0-10 MILLAMMETER	A104194-4
241	300 OHMS, THES. CONTROL	A105022
242	3000 OHMS, GAIN CONTROL	C58961
243	SELECTOR SWITCH	C58583
244-1	1 MEGOHM, $\frac{1}{2}$W RES.	A102975-105
244-2	1 MEGOHM, $\frac{1}{2}$W RES.	A102975-105
245-1	330 MMF, 500V DCW CAP.	C58469-331
245-2	330 MMF, 500V DCW CAP.	C58469-331
246	1.8 MMF, 500V DCW CAP.	C56336-18

REF. NO.	DESCRIPTION	DWG. NO.
247	220 MMF, 500V DCW CAP.	C58469-221
248	0.1 MFD, 400V DCW CAP.	A18015-104
249	18,000 OHMS, $\frac{1}{4}$W RES.	A18001-183
250	2,200 OHMS, $\frac{1}{4}$W RES.	A18001-222
251	1 MEG, VOLUME CONTROL	A102616
252	68,000 OHMS, $\frac{1}{2}$W RES.	A102975-683
253-1	33,000 OHMS, $\frac{1}{2}$W RES.	A102975-333
253-2	33,000 OHMS, $\frac{1}{2}$W RES.	A102975-333
254	ATTENUATOR SWITCH	C58584
255	330,000 OHMS, $\frac{1}{2}$W RES.	A102975-334
256	560 OHMS, 2W RES.	RC41BE561J
257	.0068 MFD, 500V DCW CAP.	A25714-7
258	OUTPUT TRANS.	A103058
259	PRI. OUTPUT TRANS.	A103058
260	SEC. OUTPUT TRANS.	A103058
261	4700 OHMS, $\frac{1}{4}$W RES.	A18001-472
262-1	PHONE JACK	A103533
262-2	PHONE JACK	A103533
263	JONES PLUG	A105106
264	4700 OHMS, $\frac{1}{2}$W RES.	A18004-472
265	100 MMF, 500V DCW CAP.	C56317-101
266	C.W. OSC. PLATE COIL	AA106068
267	4.7 MMF, 500V DCW CAP.	C58469-47
268	47,000 OHMS, $\frac{1}{2}$W RES.	A18004-473
269	C.W. OSC. GRID COIL	A105036-1
270	VARIABLE CAP.	A105041
271	390 MMF, 500V DCW CAP.	C56317-391
272	C.W. OSC. COIL ASSEM.	C58590-1
273	DIAL LIGHT ASSEM.	A104910
274	H.F. OSC. ASSEMBLY	AN91052-1
275	R.F. ASSEMBLY	AN91050-1
276-1	.001MFD, 500V DCW CAP.	C58469-102
276-2	.001MFD, 500V DCW CAP.	C58469-102
276-3	.001MFD, 500V DCW CAP.	C58469-102
276-4	.001MFD, 500V DCW CAP.	C58469-102
278-1	330 OHMS, 1W RES.	RC30BE331K
278-2	330 OHMS, 1W RES.	RC30BE331K
VT-103	DET., 1ST AUDIO, AVC	
VT-152	2ND AUDIO	
VT-202	H.F. OSC.	
VT-203	R.F. AMPLIFIER	
VT-203	MIXER	
VT-203	DOUBLER	
VT-211	1ST I.F.	
VT-211	2ND I.F.	
VT-211	3RD I.F.	
VT-211	C.W. OSC.	

RIPTION	DWG. NO.
, 500V DCW CAP.	C58495-600
, 500V DCW CAP.	C58495-600
, 500V DCW CAP.	C58495-600
	AA104206-1
	AA104206-1
	AA104206-1
	AA104206-1
	AA104206-1
	AA104206-1
	AA104206-1
	AA104206-1
MFD, 500V DCW CAP. **	A102967-8
MFD, 500V DCW CAP. **	A102967-8
MFD, 500V DCW CAP. **	A102967-8
MFD, 500V DCW CAP. **	A102967-8
MFD, 500V DCW CAP. **	A102967-8

* ANY VALUE FROM 1000 MMF TO 600 MMF. IS ACCEPTABLE.

** ANY VALUE FROM .01MFD TO .006 MFD IS ACCEPTABLE.

Figure 22 – Radio Receiver BC-639-A, Schematic Diagram

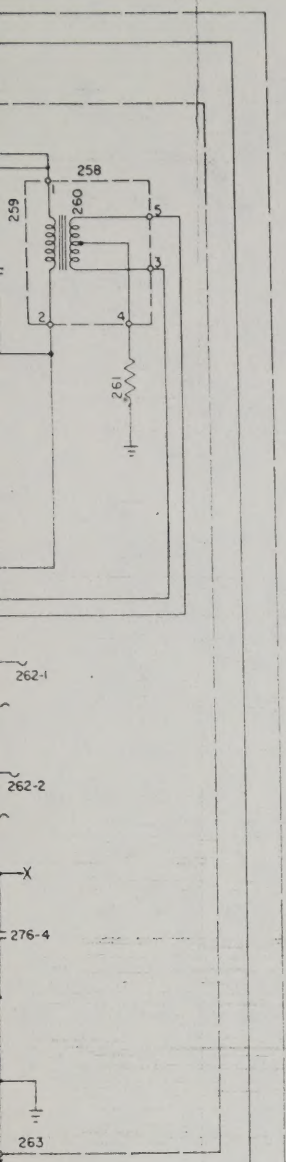

REF. NO.	DESCRIPTION	DWG. NO.
230-6	.0068MFD, 500V DCW CAP. **	A102967-8
230-7	.0068MFD, 500V DCW CAP. **	A102967-8
230-8	.0068MFD, 500V DCW CAP. **	A102967-8
230-9	.0068MFD, 500V DCW CAP. **	A102967-8
230-10	.0068MFD, 500V DCW CAP. **	A102967-8
230-11	.0068MFD, 500V DCW CAP. **	A102967-8
230-12	.0068MFD, 500V DCW CAP. **	A102967-8
230-13	.0068MFD, 500V DCW CAP. **	A102967-8
230-14	.0068MFD, 500V DCW CAP. **	A102967-8
230-15	.0068MFD, 500V DCW CAP. **	A102967-8
230-16	.0068MFD, 500V DCW CAP. **	A102967-8
230-17	.0068MFD, 500V DCW CAP. **	A102967-8
230-18	.0068MFD, 500V DCW CAP. **	A102967-8
230-19	.0068MFD, 500V DCW CAP. **	A102967-8
230-20	.0068MFD, 500V DCW CAP. **	A102967-8
230-21	.0068MFD, 500V DCW CAP. **	A102967-8
230-22	.0068MFD, 500V DCW CAP. **	A102967-8
230-23	.0068MFD, 500V DCW CAP. **	A102967-8
231	1ST I.F. ASSEM.	AL73530-1
232	2ND I.F. ASSEM.	AL73531-1
233	3RD I.F. ASSEM.	AL73026-4
234	4TH I.F. ASSEM.	AL73028-2
235-1	1,000 OHMS, $\frac{1}{4}$W RES.	A18001-102
235-2	1,000 OHMS, $\frac{1}{4}$W RES.	A18001-102
235-3	1,000 OHMS, $\frac{1}{4}$W RES.	A18001-102
235-4	1,000 OHMS, $\frac{1}{4}$W RES.	A18001-102
236-1	100,000 OHMS, $\frac{1}{4}$W RES.	A18001-104
236-2	100,000 OHMS, $\frac{1}{4}$W RES.	A18001-104
236-3	100,000 OHMS, $\frac{1}{4}$W RES.	A18001-104
236-4	100,000 OHMS, $\frac{1}{4}$W RES.	A18001-104
236-5	100,000 OHMS, $\frac{1}{4}$W RES.	A18001-104
237-1	220 OHMS, $\frac{1}{4}$W RES.	A18001-221
237-2	220 OHMS, $\frac{1}{4}$W RES.	A18001-221
237-3	220 OHMS, $\frac{1}{4}$W RES.	A18001-221
237-4	220 OHMS, $\frac{1}{4}$W RES.	A18001-221
238-1	47,000 OHMS $\frac{1}{4}$W RES.	A18001-473
238-2	47,000 OHMS $\frac{1}{4}$W RES.	A18001-473
238-3	47,000 OHMS $\frac{1}{4}$W RES.	A18001-473
238-4	47,000 OHMS $\frac{1}{4}$W RES.	A18001-473
239-1	1.0 MFD, 100V DCW CAP.	A104484
239-2	1.0 MFD, 100V DCW CAP.	A104484
240	0-10 MILLAMMETER	A104194-4
241	300 OHMS, THES. CONTROL	A105022
242	3000 OHMS, GAIN CONTROL	C58961
243	SELECTOR SWITCH	C58583
244-1	1 MEGOHM, $\frac{1}{2}$W RES.	A102975-105
244-2	1 MEGOHM, $\frac{1}{2}$W RES.	A102975-105
245-1	330 MMF, 500V DCW CAP.	C58469-331
245-2	330 MMF, 500V DCW CAP.	C58469-331
246	1.8 MMF, 500V DCW CAP.	C56336-18

REF. NO.	DESCRIPTION	DWG. NO.
247	220 MMF, 500V DCW CAP.	C58469-221
248	0.1 MFD, 400V DCW CAP.	A18011-104
249	18,000 OHMS, $\frac{1}{4}$W RES.	A18001-183
250	2,200 OHMS, $\frac{1}{4}$W RES.	A18001-222
251	1 MEG, VOLUME CONTROL	A102616
252	68,000 OHMS, $\frac{1}{2}$W RES.	A102975-683
253-1	33,000 OHMS, $\frac{1}{2}$W RES.	A102975-333
253-2	33,000 OHMS, $\frac{1}{2}$W RES.	A102975-333
254	ATTENUATOR SWITCH	C58584
255	330,000 OHMS, $\frac{1}{2}$W RES.	A102975-334
256	560 OHMS, 2W RES.	RC41BE561J
257	.0068 MFD, 500V DCW CAP.	A25714-7
258	OUTPUT TRANS.	A103058
259	PRI. OUTPUT TRANS.	A103058
260	SEC. OUTPUT TRANS.	A103058
261	4700 OHMS, $\frac{1}{4}$W RES.	A18001-472
262-1	PHONE JACK	A103533
262-2	PHONE JACK	A103533
263	JONES PLUG	A105106
264	4700 OHMS, $\frac{1}{2}$W RES.	A18004-472
265	100 MMF, 500V DCW CAP.	C56317-101
266	C.W. OSC. PLATE COIL	AA106068
267	4.7 MMF, 500V DCW CAP.	C58469-47
268	47,000 OHMS, $\frac{1}{2}$W RES.	A18004-473
269	C.W. OSC. GRID COIL	A105036-1
270	VARIABLE CAP.	A105041
271	390 MMF, 500V DCW CAP.	C56317-391
272	C.W. OSC. COIL ASSEM.	C58590-1
273	DIAL LIGHT ASSEM.	A104910
274	H.F. OSC. ASSEMBLY	AN91052-1
275	R.F. ASSEMBLY	AN91050-1
276-1	.001MFD, 500V DCW CAP.	C58469-102
276-2	.001MFD, 500V DCW CAP.	C58469-102
276-3	.001MFD, 500V DCW CAP.	C58469-102
276-4	.001MFD, 500V DCW CAP.	C58469-102
278-1	330 OHMS, 1W RES.	RC30BE331K
278-2	330 OHMS, 1W RES.	RC30BE331K
VT-103	DET., 1ST AUDIO, AVC	
VT-152	2ND AUDIO	
VT-202	H.F. OSC.	
VT-203	R.F. AMPLIFIER	
VT-203	MIXER	
VT-203	DOUBLER	
VT-211	1ST I.F.	
VT-211	2ND I.F.	
VT-211	3RD I.F.	
VT-211	C.W. OSC.	

PTION	DWG. NO.
500V DCW CAP.	C58495-600
500V DCW CAP.	C58495-600
500V DCW CAP.	C58495-600
	AA104206-1
	AA104206-1
	AA104206-1
	AA104206-1
	AA104206-1
	AA104206-1
	AA104206-1
	AA104206-1
	AA104206-1
D, 500V DCW CAP. **	A102967-8
D, 500V DCW CAP. **	A102967-8
D, 500V DCW CAP. **	A102967-8
D, 500V DCW CAP. **	A102967-8
D, 500V DCW CAP. **	A102967-8

* ANY VALUE FROM 1000 MMF TO 600 MMF. IS ACCEPTABLE.

** ANY VALUE FROM .01MFD TO .006 MFD IS ACCEPTABLE.

Figure 22 – Radio Receiver BC-639-A, Schematic Diagram

VT-203	R-F Amplifier	0	2.7	Gnd	6.3	205	93	2.7	—
VT-203	Mixer	0	2.4	Gnd	6.3	208	53	2.4	—
VT-203	Doubler	0	4.1	Gnd	6.3	190	95	4.1	—
VT-202	Oscillator	180	Gnd	6.3	Gnd	180	-5.8*	0	—
VT-211	1st I-F Amp.	Gnd	6.3	2.6	0	2.6	125	Gnd	205
VT-211	2nd I-F Amp.	Gnd	6.3	2.6	0	2.6	125	Gnd	205
VT-211	3rd I-F Amp.	Gnd	6.3	2.6	0	2.6	125	Gnd	205
VT-103	Det., 1st Audio, AVC	Gnd	6	10.0	9.5	0	145	6.3	Gnd
VT-152	2nd Audio	NC	6.3	205	210	0	NC	Gnd	19
VT-211	CW Osc.	Gnd	6.3	Gnd	-2.7*	Gnd	122	Gnd	185

*Measurement made while tube is oscillating. Underlined figures indicate a-c voltage if Rectifier RA-42-A is used.

TABLE OF VOLTAGE MEASUREMENTS USING A 1000-OHMS-PER-VOLT VOLTMETER.

Tube	*Function*	*Tube Socket Terminals*							
		1	*2*	*3*	*4*	*5*	*6*	*7*	*8*
VT-203	R-F Amplifier	0	2.7†	Gnd	6.3†	200	93	2.7†	—
VT-203	Mixer	0	2.4†	Gnd	6.3†	205	45	2.4†	—
VT-203	Doubler	0	4.1†	Gnd	6.3†	180	95	4.1†	—
VT-202	Oscillator	140	Gnd	6.3†	Gnd	150	0*	0	—
VT-211	1st I-F Amp.	Gnd	6.3†	2.5†	0	2.5†	125	Gnd	205
VT-211	2nd I-F Amp.	Gnd	6.3†	2.5†	0	2.5†	125	Gnd	205
VT-211	3rd I-F Amp.	Gnd	6.3†	2.5†	0	2.5†	125	Gnd	205
VT-103	Det., 1st Audio, AVC	Gnd	0	5†	0.5†	0	103	6.3†	Gnd
VT-152	2nd Audio	NC	6.3†	205	210	0	NC	Gnd	20‡
VT-211	CW Osc.	Gnd	6.3†	Gnd	-0.2†	Gnd	90	Gnd	185

*High frequency oscillator grid connected to ground.
†Measured on 10v scale 1000 ohm-per-volt meter.
‡Measured on 50v scale 1000 ohm-per-volt meter.
Underlined figures indicate a-c voltage if Rectifier RA-42-A is used.

33. TYPICAL VACUUM TUBE-SOCKET RESISTANCE.

a. The values in the tables were taken from the tube socket terminal to ground (chassis) with an RCA VoltOhmyst Jr. The power supply and antenna plugs were disconnected. All tubes were in their sockets, *except for the values so designated a having been taken with the tube removed.* Th controls on the front panel were set as follows:

(1) R.F. GAIN INCREASE control a maximum.

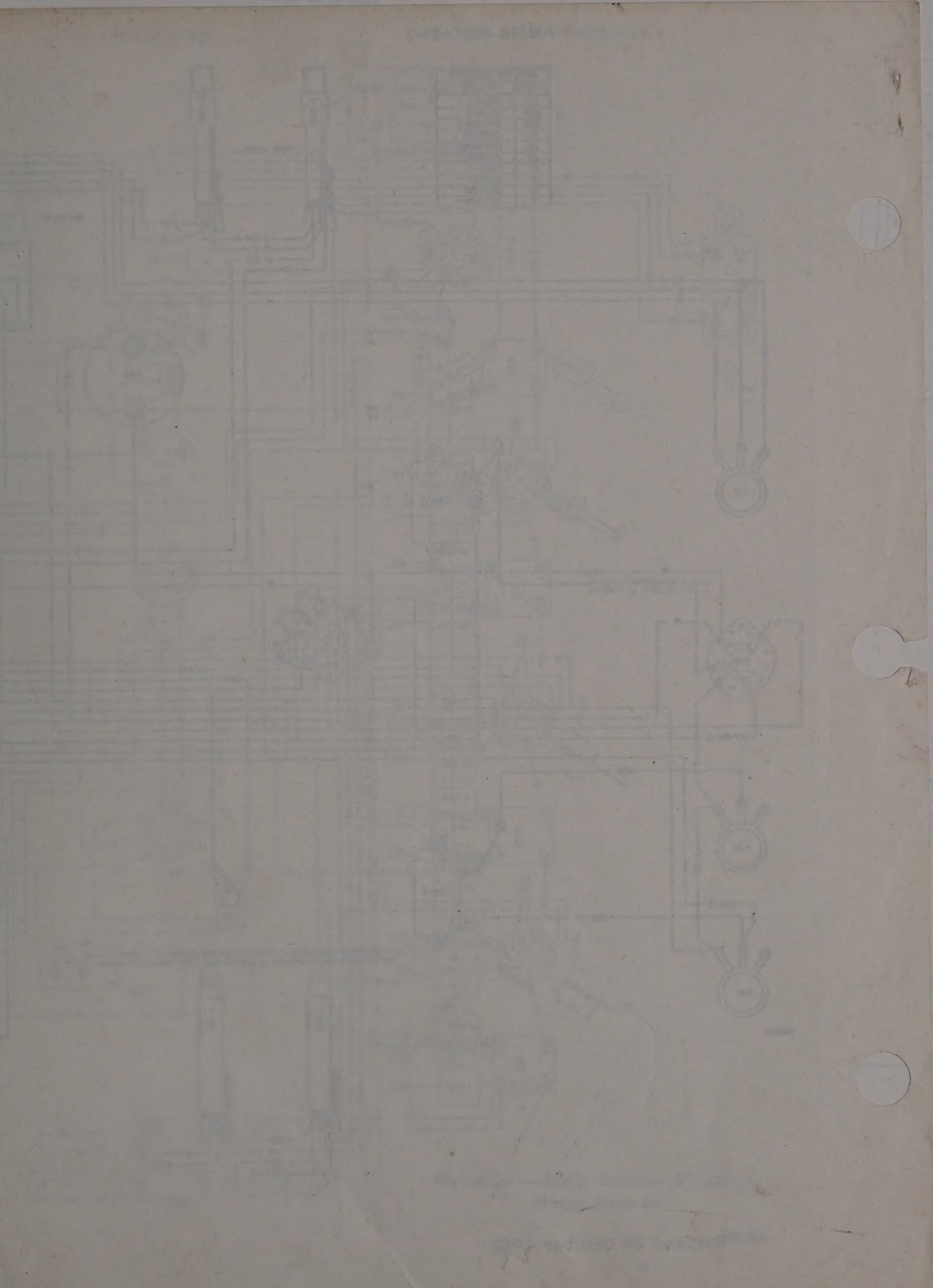

VT-203	R-F Amplifier	0	2.7	Gnd	6.3	205	93	2.7	—
VT-203	Mixer	0	2.4	Gnd	6.3	208	53	2.4	—
VT-203	Doubler	0	4.1	Gnd	6.3	190	95	4.1	—
VT-202	Oscillator	180	Gnd	6.3	Gnd	180	-5.8*	0	—
VT-211	1st I-F Amp.	Gnd	6.3	2.6	0	2.6	125	Gnd	205
VT-211	2nd I-F Amp.	Gnd	6.3	2.6	0	2.6	125	Gnd	205
VT-211	3rd I-F Amp.	Gnd	6.3	2.6	0	2.6	125	Gnd	205
VT-103	Det., 1st Audio, AVC	Gnd	6	10.0	9.5	0	145	6.3	Gnd
VT-152	2nd Audio	NC	6.3	205	210	0	NC	Gnd	19
VT-211	CW Osc.	Gnd	6.3	Gnd	-2.7*	Gnd	122	Gnd	185

*Measurement made while tube is oscillating. Underlined figures indicate a-c voltage if Rectifier RA-42-A is used.

TABLE OF VOLTAGE MEASUREMENTS USING A 1000-OHMS-PER-VOLT VOLTMETER.

Tube	*Function*	*Tube Socket Terminals*							
		1	*2*	*3*	*4*	*5*	*6*	*7*	*8*
VT-203	R-F Amplifier	0	2.7†	Gnd	6.3†	200	93	2.7†	—
VT-203	Mixer	0	2.4†	Gnd	6.3†	205	45	2.4†	—
VT-203	Doubler	0	4.1†	Gnd	6.3†	180	95	4.1†	—
VT-202	Oscillator	140	Gnd	6.3†	Gnd	150	0*	0	—
VT-211	1st I-F Amp.	Gnd	6.3†	2.5†	0	2.5†	125	Gnd	205
VT-211	2nd I-F Amp.	Gnd	6.3†	2.5†	0	2.5†	125	Gnd	205
VT-211	3rd I-F Amp.	Gnd	6.3†	2.5†	0	2.5†	125	Gnd	205
VT-103	Det., 1st Audio, AVC	Gnd	0	5†	0.5†	0	103	6.3†	Gnd
VT-152	2nd Audio	NC	6.3†	205	210	0	NC	Gnd	20‡
VT-211	CW Osc.	Gnd	6.3†	Gnd	-0.2†	Gnd	90	Gnd	185

*High frequency oscillator grid connected to ground.
†Measured on 10v scale 1000 ohm-per-volt meter.
‡Measured on 50v scale 1000 ohm-per-volt meter.
Underlined figures indicate a-c voltage if Rectifier RA-42-A is used.

33. TYPICAL VACUUM TUBE-SOCKET RESISTANCE.

a. The values in the tables were taken from the tube socket terminal to ground (chassis) with an RCA VoltOhmyst Jr. The power supply and antenna plugs were disconnected. All tubes were in their sockets, *except for the values so designated a having been taken with the tube removed.* Th controls on the front panel were set as follows:

(1) R.F. GAIN INCREASE control a maximum.

AN 16-40BC639-2
AN 16-40BC639-2

WIRING LEGEND	
CODE	COLOR
B	BLUE
BK	BLACK
BR	BROWN
G	GREEN
O	ORANGE
P	PURPLE
R	RED
S	SLATE
W	WHITE
Y	YELLOW

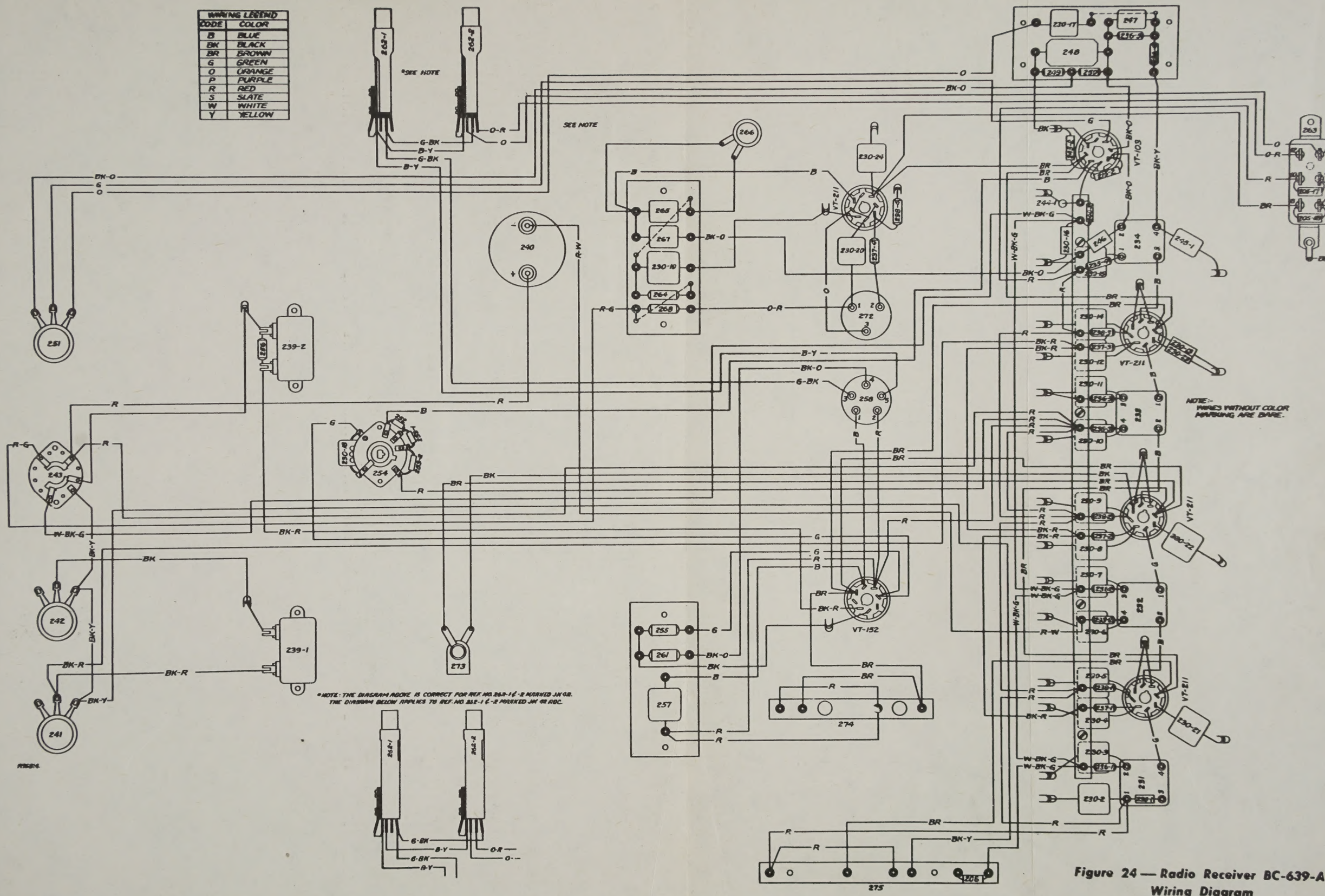

Figure 24 — Radio Receiver BC-639-A, Wiring Diagram

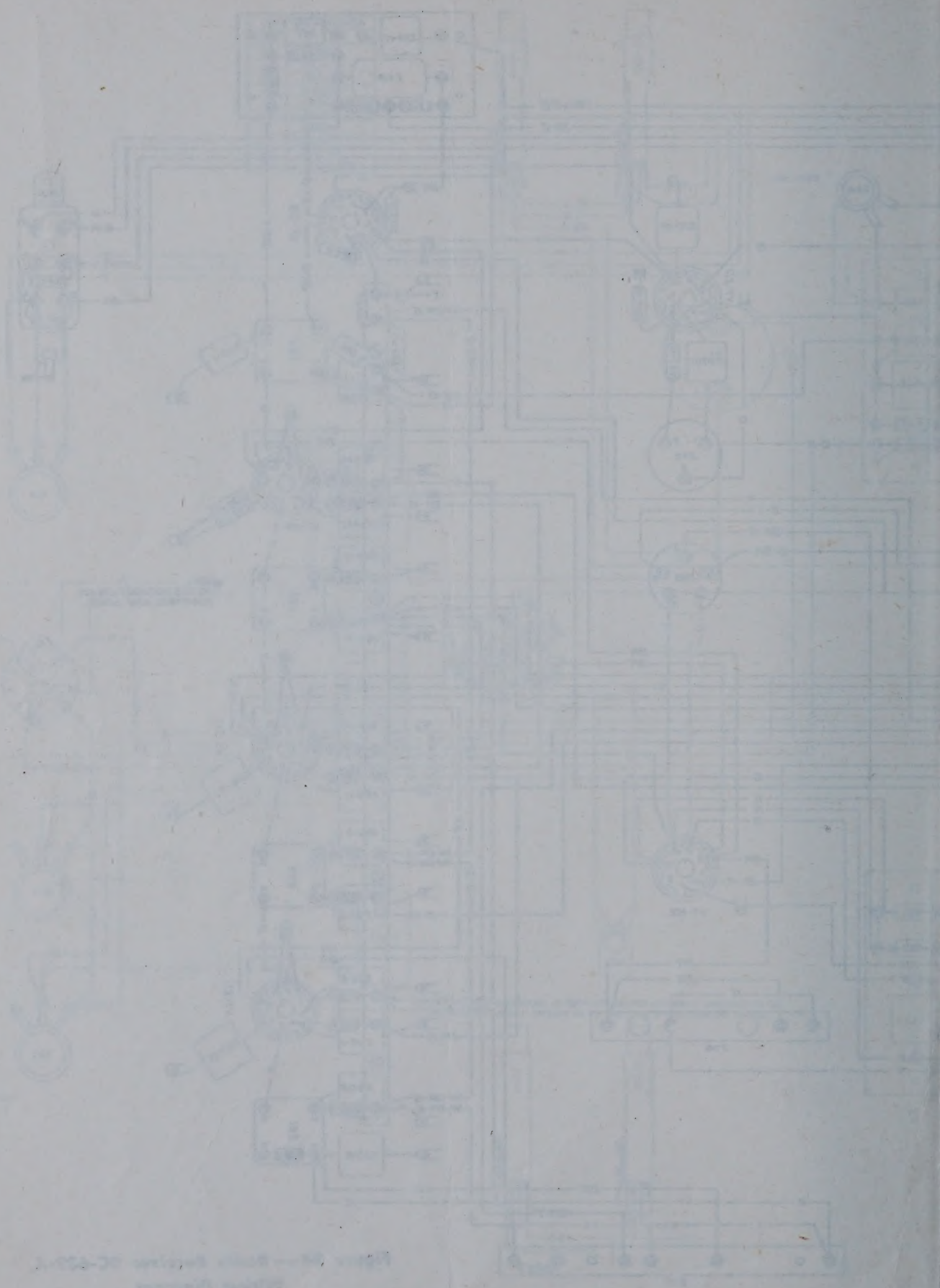

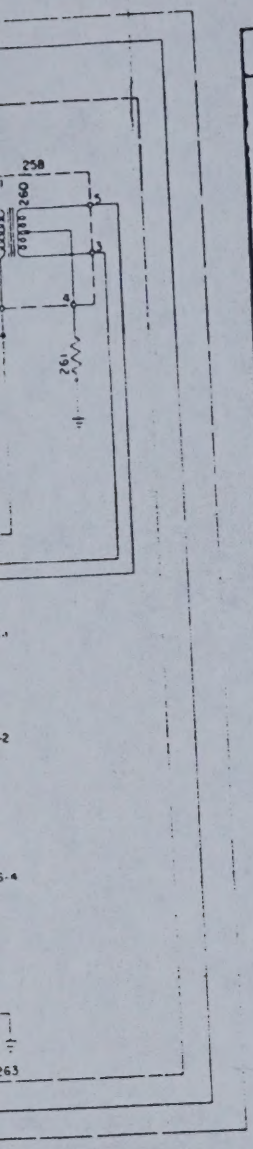

REF. NO.	DESCRIPTION	DWG. NO.
230-6	.0068MFD, 500V DCW CAP. *	A102967-8
230-7	.0068MFD, 500V DCW CAP. *	A102967-8
230-8	.0068MFD, 500V DCW CAP. *	A102967-8
230-9	.0068MFD, 500V DCW CAP. *	A102967-8
230-10	.0068MFD, 500V DCW CAP. *	A102967-8
230-11	.0068MFD, 500V DCW CAP. **	A102967-8
230-12	.0068MFD, 500V DCW CAP. *	A102967-8
230-13	.0068MFD, 500V DCW CAP. *	A102967-8
230-14	.0068MFD, 500V DCW CAP. *	A102967-8
230-15	.0068MFD, 500V DCW CAP. *	A102967-8
230-16	.0068MFD, 500V DCW CAP. **	A102967-8
230-17	.0068MFD, 500V DCW CAP. *	A102967-8
230-18	.0068MFD, 500V DCW CAP. **	A102967-8
230-19	.0068MFD, 500V DCW CAP. **	A102967-8
230-20	.0068MFD, 500V DCW CAP. *	A102967-8
230-21	.0068MFD, 500V DCW CAP. **	A102967-8
230-22	.0068MFD, 500V DCW CAP. **	A102967-8
230-23	.0068MFD, 500V DCW CAP. **	A102967-8
231	1ST I.F. ASSEM.	AL73530-1
232	2ND I.F. ASSEM.	AL73531-1
233	3RD I.F. ASSEM.	AL73026-4
234	4TH I.F. ASSEM.	AL73028-2
235-1	1,000 OHMS, ½W RES.	A18001-102
235-2	1,000 OHMS, ½W RES.	A18001-102
235-3	1,000 OHMS, ½W RES.	A18001-102
235-4	1,000 OHMS, ½W RES.	A18001-102
236-1	100,000 OHMS, ½W RES.	A18001-104
236-2	100,000 OHMS, ½W RES.	A18001-104
236-3	100,000 OHMS, ½W RES.	A18001-104
236-4	100,000 OHMS, ½W RES.	A18001-104
236-5	100,000 OHMS, ½W RES.	A18001-104
237-1	220 OHMS, ½W RES.	A18001-221
237-2	220 OHMS, ½W RES.	A18001-221
237-3	220 OHMS, ½W RES.	A18001-221
237-4	220 OHMS, ½W RES.	A18001-221
238-1	47,000 OHMS ½W RES.	A18001-473
238-2	47,000 OHMS ½W RES.	A18001-473
238-3	47,000 OHMS ½W RES.	A18001-473
238-4	47,000 OHMS ½W RES.	A18001-473
239-1	1.0 MFD, 100V DCW CAP.	A104484
239-2	1.0 MFD, 100V DCW CAP.	A104484
240	0-10 MILLAMMETER	A104194-4
241	300 OHMS, THES. CONTROL	A105022
242	3000 OHMS, GAIN CONTROL	C58961
243	SELECTOR SWITCH	C58583
244-1	1 MEGOHM, ½W RES.	A102975-105
244-2	1 MEGOHM, ½W RES.	A102975-105
245-1	330 MMF, 500V DCW CAP.	C58469-331
245-2	330 MMF, 500V DCW CAP.	C58469-331
246	1.8 MMF, 500V DCW CAP.	C56336-18
247	220 MMF, 500V DCW CAP.	C58469-221
248	0.1 MFD, 400V DCW CAP.	A18011-104
249	18,000 OHMS, ½W RES.	A18001-183
250	2,200 OHMS, ½W RES.	A18001-222
251	1 MEG, VOLUME CONTROL	A102616
252	68,000 OHMS, ½W RES.	A102975-683
253-1	33,000 OHMS, ½W RES.	A102975-333
253-2	33,000 OHMS, ½W RES.	A102975-333
254	ATTENUATOR SWITCH	C58584
255	330,000 OHMS, ½W RES.	A102975-334
256	560 OHMS, 2W RES.	RC41BE561J
257	.0068 MFD, 500V DCW CAP.	A25714-7
258	OUTPUT TRANS.	A103058
259	PRI. OUTPUT TRANS.	A103058
260	SEC. OUTPUT TRANS.	A103058
261	4700 OHMS, ½W RES.	A18001-472
262-1	PHONE JACK	A103533
262-2	PHONE JACK	A103533
263	JONES PLUG	A105106
264	4700 OHMS, ½W RES.	A18004-472
265	100 MMF, 500V DCW CAP.	C56317-101
266	C.W. OSC. PLATE COIL	AA106068
267	4.7 MMF, 500V DCW CAP.	C58469-47
268	47,000 OHMS, ½W RES.	A18004-473
269	C.W. OSC. GRID COIL	A105036-1
270	VARIABLE CAP.	A105041
271	390 MMF, 500V DCW CAP.	C56317-391
272	C.W. OSC. COIL ASSEM.	C58590-1
273	DIAL LIGHT ASSEM.	A104910
274	H.F. OSC. ASSEMBLY	AN91052-1
275	R.F. ASSEMBLY	AN91050-1
276-1	.001MFD, 500V DCW CAP.	C58469-102
276-2	.001MFD, 500V DCW CAP.	C58469-102
276-3	.001MFD, 500V DCW CAP.	C58469-102
276-4	.001MFD, 500V DCW CAP.	C58469-102
278-1	330 OHMS, 1W RES.	RC30BE331K
278-2	330 OHMS, 1W RES.	RC30BE331K
VT-103	DET., 1ST AUDIO, AVC	
VT-152	2ND AUDIO	
VT-202	H.F. OSC.	
VT-203	R.F. AMPLIFIER	
VT-203	MIXER	
VT-203	DOUBLER	
VT-211	1ST I.F.	
VT-211	2ND I.F.	
VT-211	3RD I.F.	
VT-211	C.W. OSC.	

TION	DWG. NO.
00V DCW CAP.	C58495-600
00V DCW CAP.	C58495-600
00V DCW CAP.	C58495-600
	AA104206-1
	AA104206-1
	AA104206-1
	AA104206-1
	AA104206-1
	AA104206-1
	AA104206-1
	AA104206-1
D. 500V DCW CAP. *	A102967-8
D. 500V DCW CAP. *	A102967-8
D. 500V DCW CAP. *	A102967-8
D. 500V DCW CAP. *	A102967-8
D. 500V DCW CAP. *	A102967-8

* ANY VALUE FROM 1000 MMF TO 600 MMF. IS ACCEPTABLE.

** ANY VALUE FROM .01MFD TO .006 MFD IS ACCEPTABLE.

Figure 22 – Radio Receiver BC-639-A, Schematic Diagram

62A-62B

Revised 1 April 1956

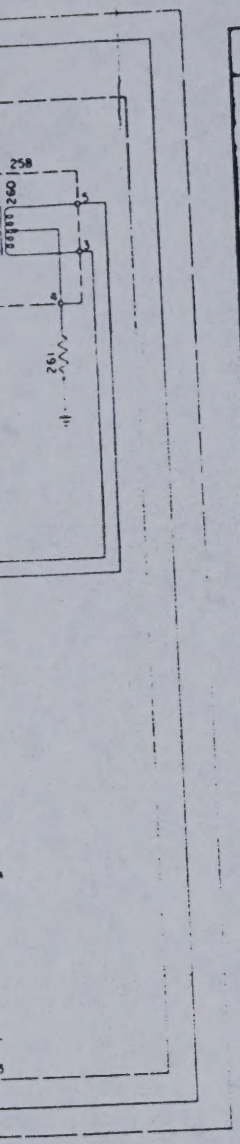

REF. NO.	DESCRIPTION	DWG. NO.
230-6	.0068MFD, 500V DCW CAP. *	A102967-8
230-7	.0068MFD, 500V DCW CAP. *	A102967-8
230-8	.0068MFD, 500V DCW CAP. *	A102967-8
230-9	.0068MFD, 500V DCW CAP. *	A102967-8
230-10	.0068MFD, 500V DCW CAP. *	A102967-8
230-11	.0068MFD, 500V DCW CAP. *	A102967-8
230-12	.0068MFD, 500V DCW CAP. *	A102967-8
230-13	.0068MFD, 500V DCW CAP. *	A102967-8
230-14	.0068MFD, 500V DCW CAP. *	A102967-8
230-15	.0068MFD, 500V DCW CAP. *	A102967-8
230-16	.0068MFD, 500V DCW CAP. *	A102967-8
230-17	.0068MFD, 500V DCW CAP. *	A102967-8
230-18	.0068MFD, 500V DCW CAP. *	A102967-8
230-19	.0068MFD, 500V DCW CAP. *	A102967-8
230-20	.0068MFD, 500V DCW CAP. *	A102967-8
230-21	.0068MFD, 500V DCW CAP. *	A102967-8
230-22	.0068MFD, 500V DCW CAP. *	A102967-8
230-23	.0068MFD, 500V DCW CAP. *	A102967-8
231	1ST I.F. ASSEM.	AL73530-1
232	2ND I.F. ASSEM.	AL73531-1
233	3RD I.F. ASSEM.	AL73026-4
234	4TH I.F. ASSEM.	AL73028-2
235-1	1,000 OHMS, ½W RES.	A18001-102
235-2	1,000 OHMS, ½W RES.	A18001-102
235-3	1,000 OHMS, ½W RES.	A18001-102
235-4	1,000 OHMS, ½W RES.	A18001-102
236-1	100,000 OHMS, ½W RES.	A18001-104
236-2	100,000 OHMS, ½W RES.	A18001-104
236-3	100,000 OHMS, ½W RES.	A18001-104
236-4	100,000 OHMS, ½W RES.	A18001-104
236-5	100,000 OHMS, ½W RES.	A18001-104
237-1	220 OHMS, ½W RES.	A18001-221
237-2	220 OHMS, ½W RES.	A18001-221
237-3	220 OHMS, ½W RES.	A18001-221
237-4	220 OHMS, ½W RES.	A18001-221
238-1	47,000 OHMS ½W RES.	A18001-473
238-2	47,000 OHMS ½W RES.	A18001-473
238-3	47,000 OHMS ½W RES.	A18001-473
238-4	47,000 OHMS ½W RES.	A18001-473
239-1	1.0 MFD, 100V DCW CAP.	A104484
239-2	1.0 MFD, 100V DCW CAP.	A104484
240	0-10 MILLAMMETER	A104194-4
241	300 OHMS, THES. CONTROL	A105022
242	3000 OHMS, GAIN CONTROL	C58961
243	SELECTOR SWITCH	C58583
244-1	1 MEGOHM, ½W RES.	A102975-105
244-2	1 MEGOHM, ½W RES.	A102975-105
245-1	330 MMF, 500V DCW CAP.	C58469-331
245-2	330 MMF, 500V DCW CAP.	C58469-331
246	1.8 MMF, 500V DCW CAP.	C56336-18

REF. NO.	DESCRIPTION	DWG. NO.
247	220 MMF, 500V DCW CAP.	C58469-221
248	0.1 MFD, 400V DCW CAP.	A18011-104
249	18,000 OHMS, ½W RES.	A18001-183
250	2,200 OHMS, ½W RES.	A18001-222
251	1 MEG, VOLUME CONTROL	A102616
252	68,000 OHMS, ½W RES.	A102975-683
253-1	33,000 OHMS, ½W RES.	A102975-333
253-2	33,000 OHMS, ½W RES.	A102975-333
254	ATTENUATOR SWITCH	C58584
255	330,000 OHMS, ½W RES.	A102975-334
256	560 OHMS, 2W RES.	RC41BE561J
257	.0068 MFD, 500V DCW CAP.	A25714-7
258	OUTPUT TRANS.	A103058
259	PRI. OUTPUT TRANS.	A103058
260	SEC. OUTPUT TRANS.	A103058
261	4700 OHMS, ½W RES.	A18001-472
262-1	PHONE JACK	A103533
262-2	PHONE JACK	A103533
263	JONES PLUG	A105106
264	4700 OHMS, ½W RES.	A18004-472
265	100 MMF, 500V DCW CAP.	C56317-101
266	C.W. OSC. PLATE COIL	AA106068
267	4.7 MMF, 500V DCW CAP.	C58469-47
268	47,000 OHMS, ½W RES.	A18004-473
269	C.W. OSC. GRID COIL	A105036-1
270	VARIABLE CAP.	A105041
271	390 MMF, 500V DCW CAP.	C56317-391
272	C.W. OSC. COIL ASSEM.	C58590-1
273	DIAL LIGHT ASSEM.	A104910
274	H.F. OSC. ASSEMBLY	AN91052-1
275	R.F. ASSEMBLY	AN91050-1
276-1	.001MFD, 500V DCW CAP.	C58469-102
276-2	.001MFD, 500V DCW CAP.	C58469-102
276-3	.001MFD, 500V DCW CAP.	C58469-102
276-4	.001MFD, 500V DCW CAP.	C58469-102
278-1	330 OHMS, 1W RES.	RC30BE331K
278-2	330 OHMS, 1W RES.	RC30BE331K
VT-103	DET., 1ST AUDIO, AVC	
VT-152	2ND AUDIO	
VT-202	H.F. OSC.	
VT-203	R.F. AMPLIFIER	
VT-203	MIXER	
VT-203	DOUBLER	
VT-211	1ST I.F.	
VT-211	2ND I.F.	
VT-211	3RD I.F.	
VT-211	C.W. OSC.	

ON	DWG. NO.
V DCW CAP.	C58495-600
V DCW CAP.	C58495-600
V DCW CAP.	C58495-600
	AA104206-1
	AA104206-1
	AA104206-1
	AA104206-1
	AA104206-1
	AA104206-1
	AA104206-1
	AA104206-1
	AA104206-1
500V DCW CAP. *	A102967-8
500V DCW CAP. *	A102967-8
500V DCW CAP. *	A102967-8
500V DCW CAP. *	A102967-8
500V DCW CAP. *	A102967-8

* ANY VALUE FROM 1000 MMF TO 600 MMF. IS ACCEPTABLE.

** ANY VALUE FROM .01MFD TO .006 MFD IS ACCEPTABLE.

Figure 22 – Radio Receiver BC-639-A, Schematic Diagram

62A-62B

Revised 1 April 1956

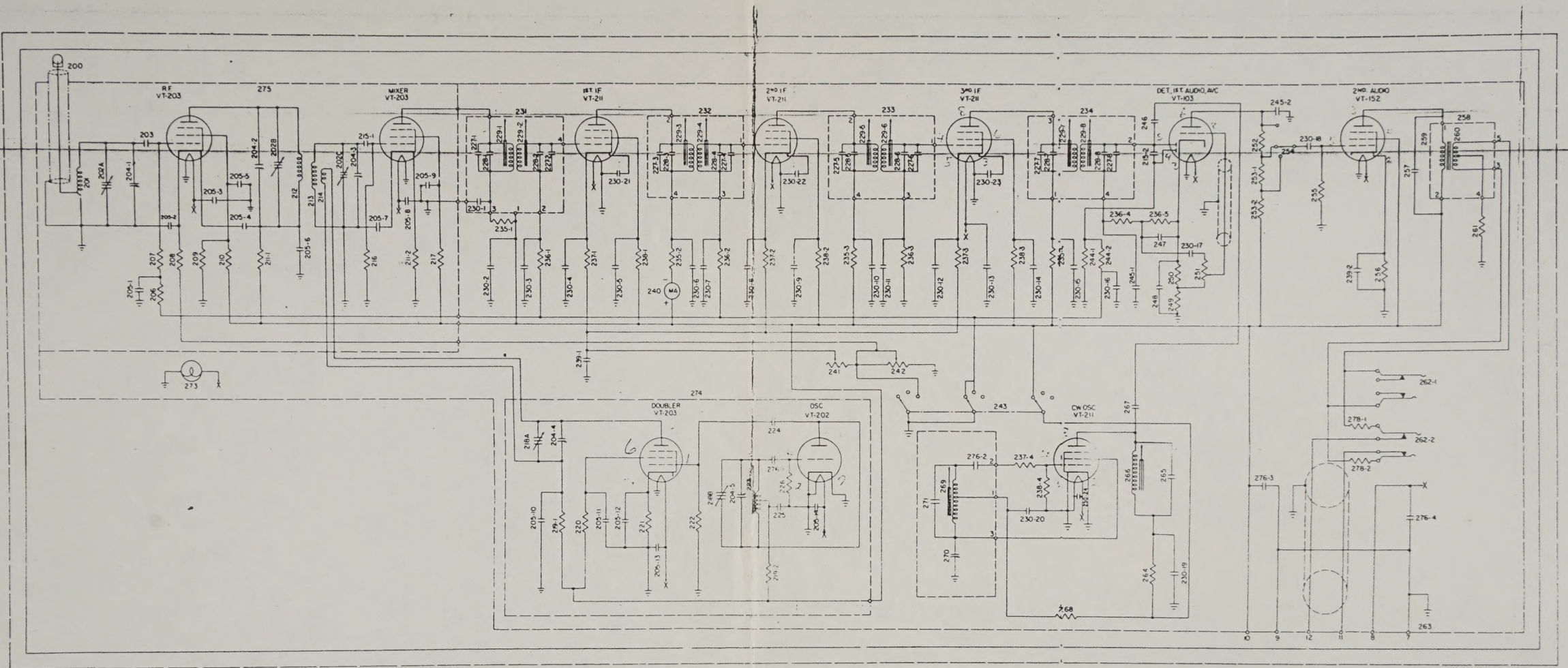

REF NO.	DESCRIPTION	DWG NO.
200	ANTENNA PLUG	C58585
201	ANTENNA COIL	A105064
202	GANG CAP (3 SEC)	L72799-2
203	15MMF, 500V DCW CAP.	C58469-150
204-1	TRIMMER CAP.	L72799-2
204-2	TRIMMER CAP.	L72799-2
204-3	TRIMMER CAP.	L72799-2
204-4	TRIMMER CAP.	L72799-2
204-5	TRIMMER CAP.	L72799-2
205-1	680MMF, 500V DCW CAP. •	C58469-102
205-2	680MMF, 500V DCW CAP. •	C58469-102
205-3	680MMF, 500V DCW CAP. •	C58469-102
205-4	680MMF, 500V DCW CAP. •	C58469-102
205-5	680MMF, 500V DCW CAP. •	C58469-102
205-6	680MMF, 500V DCW CAP. •	C58469-102
205-7	680MMF, 500V DCW CAP. •	C58469-102

REF. NO.	DESCRIPTION	DWG. NO.
205-8	680MMF, 500V DCW CAP. •	C58469-102
205-9	680MMF, 500V DCW CAP. •	C58469-102
205-10	680MMF, 500V DCW CAP. •	C58469-102
205-11	680MMF, 500V DCW CAP. •	C58469-102
205-12	680MMF, 500V DCW CAP. •	C58469-102
205-13	680MMF, 500V DCW CAP. •	C58469-102
205-14	680MMF, 500V DCW CAP. •	C58469-102
205-15	680MMF, 500V DCW CAP. •	C58469-102
205-16	680MMF, 500V DCW CAP. •	C58469-102
205-17	680MMF, 500V DCW CAP. •	C58469-102
205-18	680MMF, 500V DCW CAP. •	C58469-102
206	100,000 OHMS, ½W RES.	A102975-104
207	560,000 OHMS, ½W RES.	A102975-564
208	330 OHMS, ½W RES.	A102975-331
209	120,000 OHMS, ½W RES.	A102975-124
210	39,000 OHMS, ½W RES.	A18004-393

REF. NO.	DESCRIPTION	DWG. NO.
211-1	1,000 OHMS, ½W RES.	A102975-102
211-2	1,000 OHMS, ½W RES.	A102975-102
212	R.F. PLATE COIL	A105065
213	MIXER GRID COIL	A105066
214	DOUBLER PLATE COIL	A104311
215-1	47MMF, 500V DCW CAP.	C58469-470
215-2	47MMF, 500V DCW CAP.	C58469-470
216	1.8 MEGOHMS ½W RES.	A102975-185
217	270,000 OHMS ½W RES.	A102975-274
218	GANG CAP. (2 SEC)	L72798-2
219-1	4,700 OHMS ½W RES.	A102975-472
219-2	4,700 OHMS ½W RES.	A102975-472
220	56,000 OHMS ½W RES.	A102975-563
221	560 OHMS ½W RES.	A102975-561
222	27,000 OHMS ½W RES.	A102975-273
223	H.F. OSC. COIL	A105061

REF. NO.	DESCRIPTION	DWG. NO.
224	27MMF, 500V DCW CAP.	C58469-270
225	150MMF, 500V DCW CAP.	C58469-151
226	47,000 OHMS ½W RES.	A102975-473
227-1	15MMF, 500V DCW CAP.	A25715-15
227-2	15MMF, 500V DCW CAP.	A25715-15
227-3	15MMF, 500V DCW CAP.	A25715-15
227-4	15MMF, 500V DCW CAP.	A25715-15
227-5	15MMF, 500V DCW CAP.	A25715-15
227-6	15MMF, 500V DCW CAP.	A25715-15
227-7	15MMF, 500V DCW CAP.	A25715-15
227-8	15MMF, 500V DCW CAP.	A25715-15
228-1	60MMF, 500V DCW CAP.	C58495-600
228-2	60MMF, 500V DCW CAP.	C58495-600
228-3	60MMF, 500V DCW CAP.	C58495-600
228-4	60MMF, 500V DCW CAP.	C58495-600
228-5	60MMF, 500V DCW CAP.	C58495-600

REF. NO.	DESCRIPTION	DWG. NO.
228-6	60MMF, 500V DCW CAP.	C58495-600
228-7	60MMF, 500V DCW CAP.	C58495-600
228-8	60MMF, 500V DCW CAP.	C58495-600
229-1	IF COIL	AA104206-1
229-2	IF COIL	AA104206-1
229-3	IF COIL	AA104206-1
229-4	IF COIL	AA104206-1
229-5	IF COIL	AA104206-1
229-6	IF COIL	AA104206-1
229-7	IF COIL	AA104206-1
229-8	IF COIL	AA104206-1
230-1	.0068MFD, 500V DCW CAP.	A102967-8
230-2	.0068MFD, 500V DCW CAP.	A102967-8
230-3	.0068MFD, 500V DCW CAP.	A102967-8
230-4	.0068MFD, 500V DCW CAP.	A102967-8
230-5	.0068MFD, 500V DCW CAP.	A102967-8

Revised 1 April 1956

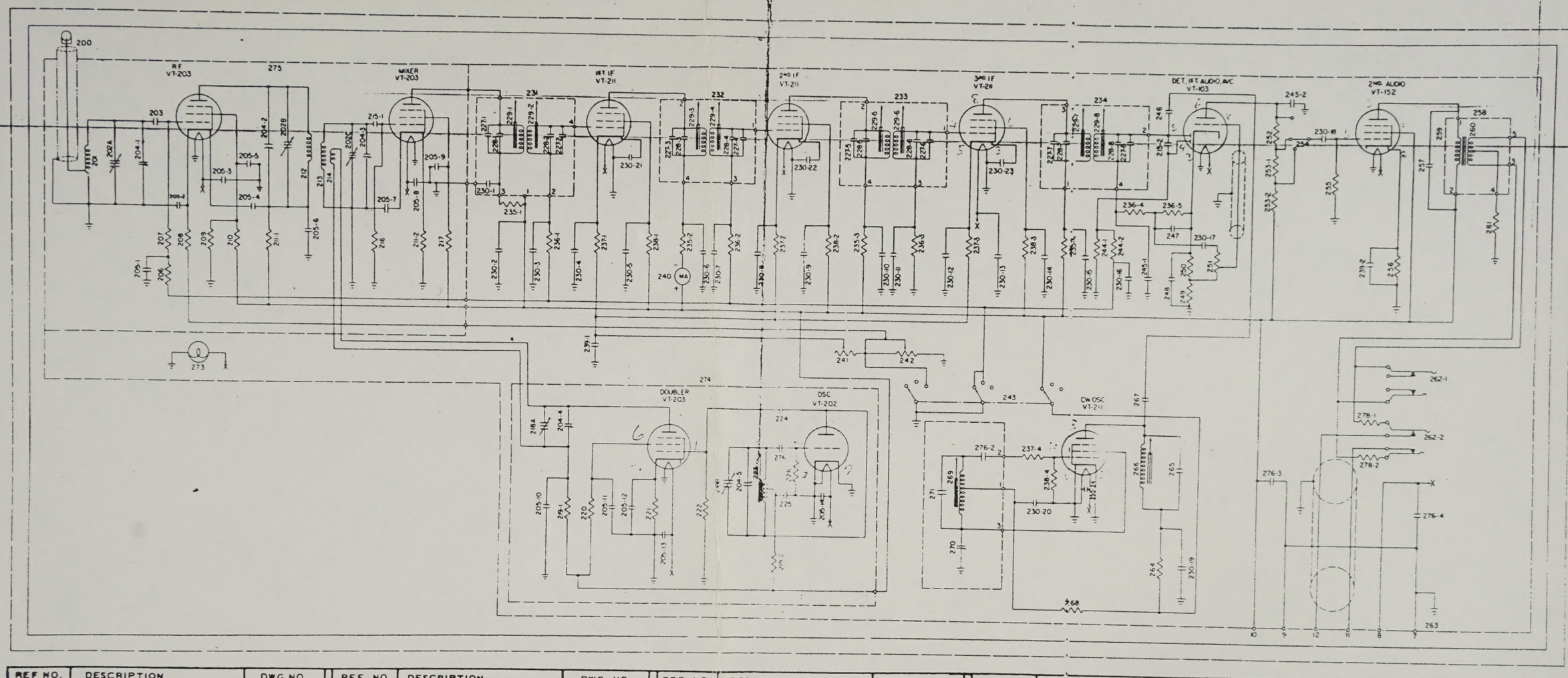

REF NO.	DESCRIPTION	DWG NO.
200	ANTENNA PLUG	C58585
201	ANTENNA COIL	A105064
202	GANG CAP (3 SEC)	L72799-2
203	15MMF, 500V DCW CAP.	C58469-150
204-1	TRIMMER CAP.	L72799-2
204-2	TRIMMER CAP.	L72799-2
204-3	TRIMMER CAP.	L72799-2
204-4	TRIMMER CAP.	L72799-2
204-5	TRIMMER CAP.	L72799-2
205-1	680MMF, 500V DCW CAP. •	C58469-102
205-2	680MMF, 500V DCW CAP. •	C58469-102
205-3	680MMF, 500V DCW CAP. •	C58469-102
205-4	680MMF, 500V DCW CAP. •	C58469-102
205-5	680MMF, 500V DCW CAP. •	C58469-102
205-6	680MMF, 500V DCW CAP. •	C58469-102
205-7	680MMF, 500V DCW CAP. •	C58469-102

REF. NO.	DESCRIPTION	DWG. NO.
205-8	680MMF, 500V DCW CAP. •	C58469-102
205-9	680MMF, 500V DCW CAP. •	C58469-102
205-10	680MMF, 500V DCW CAP. •	C58469-102
205-11	680MMF, 500V DCW CAP. •	C58469-102
205-12	680MMF, 500V DCW CAP. •	C58469-102
205-13	680MMF, 500V DCW CAP. •	C58469-102
205-14	680MMF, 500V DCW CAP. •	C58469-102
205-15	680MMF, 500V DCW CAP. •	C58469-102
205-16	680MMF, 500V DCW CAP. •	C58469-102
205-17	680MMF, 500V DCW CAP. •	C58469-102
205-18	680MMF, 500V DCW CAP. •	C58469-102
206	100,000 OHMS, ½W RES.	A102975-104
207	560,000 OHMS, ½W RES.	A102975-564
208	330 OHMS, ½W RES.	A102975-331
209	120,000 OHMS, ½W RES.	A102975-124
210	39,000 OHMS, ½W RES.	A18004-393

REF. NO.	DESCRIPTION	DWG. NO.
211-1	1,000 OHMS, ½W RES.	A102975-102
211-2	1,000 OHMS, ½W RES.	A102975-102
212	R.F. PLATE COIL	A105065
213	MIXER GRID COIL	A105066
214	DOUBLER PLATE COIL	A104311
215-1	47MMF, 500V DCW CAP.	C58469-470
215-2	47MMF, 500V DCW CAP.	C58469-470
216	1.8 MEGOHMS ½W RES.	A102975-185
217	270,000 OHMS ½W RES.	A102975-274
218	GANG CAP. (2 SEC)	L72798-2
219-1	4,700 OHMS ½W RES.	A102975-472
219-2	4,700 OHMS ½W RES.	A102975-472
220	56,000 OHMS ½W RES.	A102975-563
221	560 OHMS ½W RES.	A102975-561
222	27,000 OHMS ½W RES.	A102975-273
223	H.F. OSC. COIL	A105061

REF. NO.	DESCRIPTION	DWG. NO.
224	27MMF, 500V DCW CAP.	C58469-270
225	150MMF, 500V DCW CAP.	C58469-151
226	47,000 OHMS ½W RES.	A102975-473
227-1	15MMF, 500V DCW CAP.	A25715-15
227-2	15MMF, 500V DCW CAP.	A25715-15
227-3	15MMF, 500V DCW CAP.	A25715-15
227-4	15MMF, 500V DCW CAP.	A25715-15
227-5	15MMF, 500V DCW CAP.	A25715-15
227-6	15MMF, 500V DCW CAP.	A25715-15
227-7	15MMF, 500V DCW CAP.	A25715-15
227-8	15MMF, 500V DCW CAP.	A25715-15
228-1	60MMF, 500V DCW CAP.	C58495-600
228-2	60MMF, 500V DCW CAP.	C58495-600
228-3	60MMF, 500V DCW CAP.	C58495-600
228-4	60MMF, 500V DCW CAP.	C58495-600
228-5	60MMF, 500V DCW CAP.	C58495-600

REF. NO.	DESCRIPTION	DWG. NO.
228-6	60MMF, 500V DCW CAP.	C58495-600
228-7	60MMF, 500V DCW CAP.	C58495-600
228-8	60MMF, 500V DCW CAP.	C58495-600
229-1	IF COIL	AA104206-1
229-2	IF COIL	AA104206-1
229-3	IF COIL	AA104206-1
229-4	IF COIL	AA104206-1
229-5	IF COIL	AA104206-1
229-6	IF COIL	AA104206-1
229-7	IF COIL	AA104206-1
229-8	IF COIL	AA104206-1
230-1	.0068MFD, 500V DCW CAP.	A102967-8
230-2	.0068MFD, 500V DCW CAP.	A102967-8
230-3	.0068MFD, 500V DCW CAP.	A102967-8
230-4	.0068MFD, 500V DCW CAP.	A102967-8
230-5	.0068MFD, 500V DCW CAP.	A102967-8

Revised 1 Apr

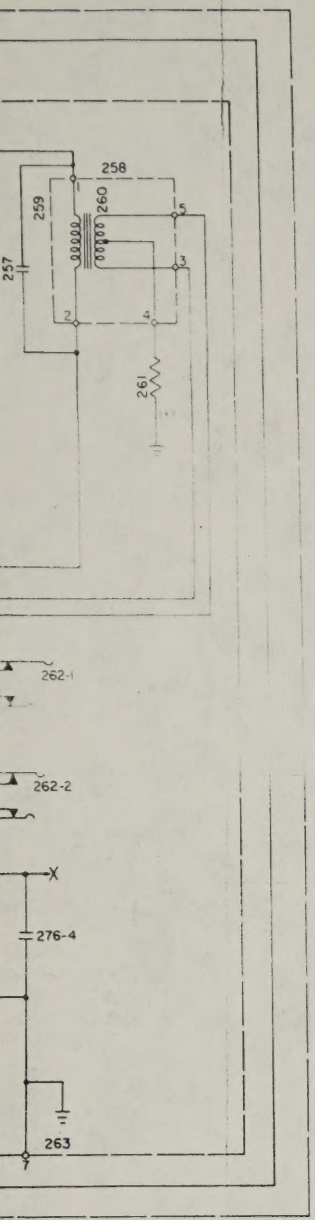

REF. NO.	DESCRIPTION	DWG. NO.
230-6	.0068MFD, 500V DCW CAP. **	A102967-8
230-7	.0068MFD, 500V DCW CAP. **	A102967-8
230-8	.0068MFD, 500V DCW CAP. **	A102967-8
230-9	.0068MFD, 500V DCW CAP. **	A102967-8
230-10	.0068MFD, 500V DCW CAP. **	A102967-8
230-11	.0068MFD, 500V DCW CAP. **	A102967-8
230-12	.0068MFD, 500V DCW CAP. **	A102967-8
230-13	.0068MFD, 500V DCW CAP. **	A102967-8
230-14	.0068MFD, 500V DCW CAP. **	A102967-8
230-15	.0068MFD, 500V DCW CAP. **	A102967-8
230-16	.0068MFD, 500V DCW CAP. **	A102967-8
230-17	.0068MFD, 500V DCW CAP. **	A102967-8
230-18	.0068MFD, 500V DCW CAP. **	A102967-8
230-19	.0068MFD, 500V DCW CAP. **	A102967-8
230-20	.0068MFD, 500V DCW CAP. **	A102967-8
230-21	.0068MFD, 500V DCW CAP. **	A102967-8
230-22	.0068MFD, 500V DCW CAP. **	A102967-8
230-23	.0068MFD, 500V DCW CAP. **	A102967-8
231	1ST I.F. ASSEM.	AL73530-1
232	2ND I.F. ASSEM.	AL73531-1
233	3RD I.F. ASSEM.	AL73026-4
234	4TH I.F. ASSEM.	AL73028-2
235-1	1,000 OHMS, $\frac{1}{4}$W RES.	A18001-102
235-2	1,000 OHMS, $\frac{1}{4}$W RES.	A18001-102
235-3	1,000 OHMS, $\frac{1}{4}$W RES.	A18001-102
235-4	1,000 OHMS, $\frac{1}{4}$W RES.	A18001-102
236-1	100,000 OHMS, $\frac{1}{4}$W RES.	A18001-104
236-2	100,000 OHMS, $\frac{1}{4}$W RES.	A18001-104
236-3	100,000 OHMS, $\frac{1}{4}$W RES.	A18001-104
236-4	100,000 OHMS, $\frac{1}{4}$W RES.	A18001-104
236-5	100,000 OHMS, $\frac{1}{4}$W RES.	A18001-104
237-1	220 OHMS, $\frac{1}{4}$W RES.	A18001-221
237-2	220 OHMS, $\frac{1}{4}$W RES.	A18001-221
237-3	220 OHMS, $\frac{1}{4}$W RES.	A18001-221
237-4	220 OHMS, $\frac{1}{4}$W RES.	A18001-221
238-1	47,000 OHMS $\frac{1}{4}$W RES.	A18001-473
238-2	47,000 OHMS $\frac{1}{4}$W RES.	A18001-473
238-3	47,000 OHMS $\frac{1}{4}$W RES.	A18001-473
238-4	47,000 OHMS $\frac{1}{4}$W RES.	A18001-473
239-1	1.0 MFD, 100V DCW CAP.	A104484
239-2	1.0 MFD, 100V DCW CAP.	A104484
240	0-10 MILLAMMETER	A104194-4
241	300 OHMS, THES. CONTROL	A105022
242	3000 OHMS, GAIN CONTROL	C58961
243	SELECTOR SWITCH	C58583
244-1	1 MEGOHM, $\frac{1}{2}$W RES.	A102975-105
244-2	1 MEGOHM, $\frac{1}{2}$W RES.	A102975-105
245-1	330 MMF, 500V DCW CAP.	C58469-331
245-2	330 MMF, 500V DCW CAP.	C58469-331
246	1.8 MMF, 500V DCW CAP.	C56336-18
247	220 MMF, 500V DCW CAP.	C58469-221
248	0.1 MFD, 400V DCW CAP.	A18011-104
249	18,000 OHMS, $\frac{1}{4}$W RES.	A18001-183
250	2,200 OHMS, $\frac{1}{4}$W RES.	A18001-222
251	1 MEG, VOLUME CONTROL	A102616
252	68,000 OHMS, $\frac{1}{2}$W RES.	A102975-683
253-1	33,000 OHMS, $\frac{1}{2}$W RES.	A102975-333
253-2	33,000 OHMS, $\frac{1}{2}$W RES.	A102975-333
254	ATTENUATOR SWITCH	C58584
255	330,000 OHMS, $\frac{1}{2}$W RES.	A102975-334
256	560 OHMS, 2W RES.	RC41BE561J
257	.0068 MFD, 500V DCW CAP.	A25714-7
258	OUTPUT TRANS.	A103058
259	PRI. OUTPUT TRANS.	A103058
260	SEC. OUTPUT TRANS.	A103058
261	4700 OHMS, $\frac{1}{4}$W RES.	A18001-472
262-1	PHONE JACK	A103533
262-2	PHONE JACK	A103533
263	JONES PLUG	A105106
264	4700 OHMS, $\frac{1}{2}$W RES.	A18004-472
265	100 MMF, 500V DCW CAP.	C56317-101
266	C.W. OSC. PLATE COIL	AA106068
267	4.7 MMF, 500V DCW CAP.	C58469-47
268	47,000 OHMS, $\frac{1}{2}$W RES.	A18004-473
269	C.W. OSC. GRID COIL	A105036-1
270	VARIABLE CAP.	A105041
271	390 MMF, 500V DCW CAP.	C56317-391
272	C.W. OSC. COIL ASSEM.	C58590-1
273	DIAL LIGHT ASSEM.	A104910
274	H.F. OSC. ASSEMBLY	AN91052-1
275	R.F. ASSEMBLY	AN91050-1
276-1	.001MFD, 500V DCW CAP.	C58469-102
276-2	.001MFD, 500V DCW CAP.	C58469-102
276-3	.001MFD, 500V DCW CAP.	C58469-102
276-4	.001MFD, 500V DCW CAP.	C58469-102
278-1	330 OHMS, 1W RES.	RC30BE331K
278-2	330 OHMS, 1W RES.	RC30BE331K
VT-103	DET., 1ST AUDIO, AVC	
VT-152	2ND AUDIO	
VT-202	H.F. OSC.	
VT-203	R.F. AMPLIFIER	
VT-203	MIXER	
VT-203	DOUBLER	
VT-211	1ST I.F.	
VT-211	2ND I.F.	
VT-211	3RD I.F.	
VT-211	C.W. OSC.	

RIPTION	DWG. NO.
F, 500V DCW CAP.	C58495-600
F, 500V DCW CAP.	C58495-600
F, 500V DCW CAP.	C58495-600
IL	AA104206-1
IL	AA104206-1
IL	AA104206-1
IL	AA104206-1
IL	AA104206-1
IL	AA104206-1
IL	AA104206-1
IL	AA104206-1
MFD, 500V DCW CAP. **	A102967-8
MFD, 500V DCW CAP. **	A102967-8
MFD, 500V DCW CAP. **	A102967-8
MFD, 500V DCW CAP. **	A102967-8
MFD, 500V DCW CAP. **	A102967-8

* ANY VALUE FROM 1000 MMF TO 600 MMF. IS ACCEPTABLE.

** ANY VALUE FROM .01MFD TO .006 MFD IS ACCEPTABLE.

Figure 22 – Radio Receiver BC-639-A, Schematic Diagram

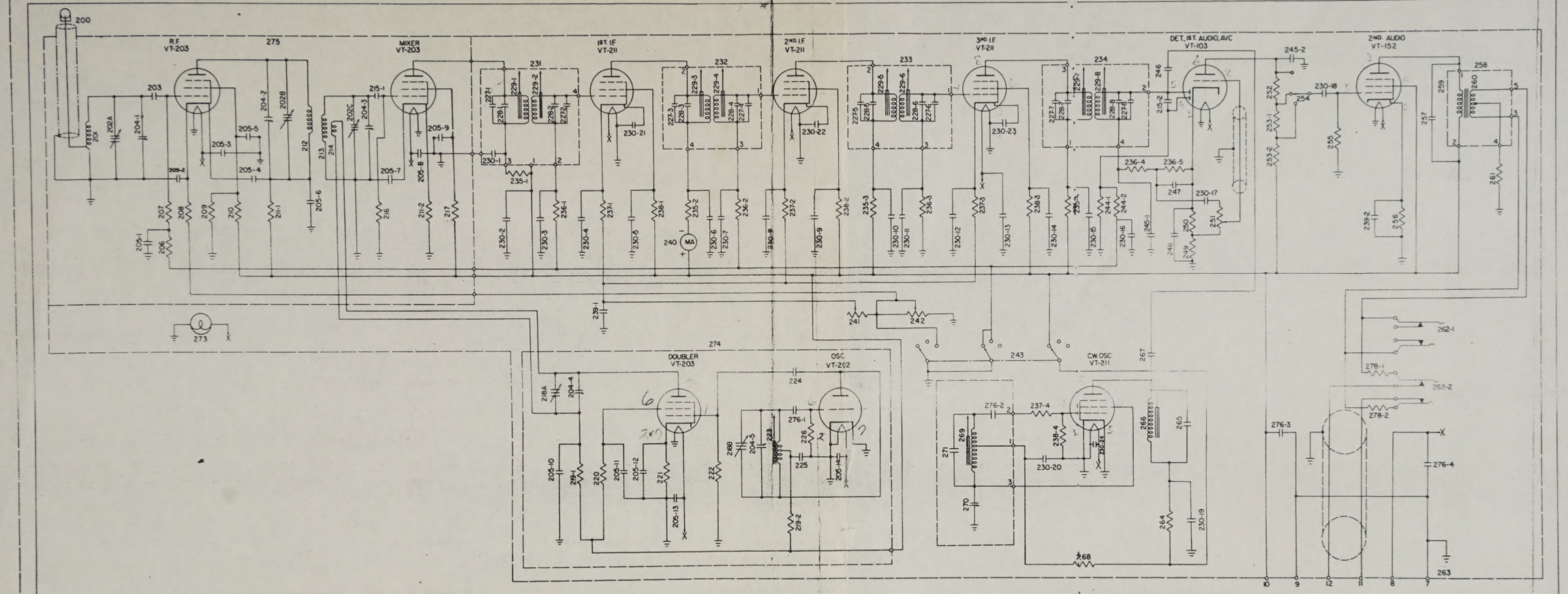

REF. NO.	DESCRIP
230-6	.0068MFD
230-7	.0068MFD
230-8	.0068MFD
230-9	.0068MFD
230-10	.0068MFD
230-11	.0068MFD
230-12	.0068MFD
230-13	.0068MFD
230-14	.0068MFD
230-15	.0068MFD
230-16	.0068MFD
230-17	.0068MFD
230-18	.0068MFD
230-19	.0068MFD
230-20	.0068MFD
230-21	.0068MFD
230-22	.0068MFD
230-23	.0068MFD
231	1ST I.F. A
232	2ND I.F. A
233	3RD I.F. A
234	4TH I.F. A
235-1	1,000 OHM
235-2	1,000 OHM
235-3	1,000 OHM
235-4	1,000 OHM
236-1	100,000 OH
236-2	100,000 OH
236-3	100,000 OH
236-4	100,000 OH
236-5	100,000 OH
237-1	220 OHMS,
237-2	220 OHMS,
237-3	220 OHMS,
237-4	220 OHMS,
238-1	47,000 OH
238-2	47,000 OH
238-3	47,000 OH
238-4	47,000 OH
239-1	1.0 MFD,
239-2	1.0 MFD,
240	0-10 MILL
241	300 OHMS,
242	3000 OHMS
243	SELECTO
244-1	1 MEGOHM
244-2	1 MEGOHM
245-1	330 MMF,
245-2	330 MMF,
246	1.8 MMF,

REF NO.	DESCRIPTION	DWG NO.
200	ANTENNA PLUG	C58585
201	ANTENNA COIL	A105064
202	GANG CAP (3 SEC)	L72799-2
203	15MMF, 500V DCW CAP.	C58469-150
204-1	TRIMMER CAP.	L72799-2
204-2	TRIMMER CAP.	L72799-2
204-3	TRIMMER CAP.	L72799-2
204-4	TRIMMER CAP.	L72799-2
204-5	TRIMMER CAP.	L72799-2
205-1	680MMF, 500V DCW CAP. •	C58469-102
205-2	680MMF, 500V DCW CAP. •	C58469-102
205-3	680MMF, 500V DCW CAP. •	C58469-102
205-4	680MMF, 500V DCW CAP. •	C58469-102
205-5	680MMF, 500V DCW CAP. •	C58469-102
205-6	680MMF, 500V DCW CAP. •	C58469-102
205-7	680MMF, 500V DCW CAP. •	C58469-102

REF. NO.	DESCRIPTION	DWG. NO.
205-8	680MMF, 500V DCW CAP. •	C58469-102
205-9	680MMF, 500V DCW CAP. •	C58469-102
205-10	680MMF, 500V DCW CAP. •	C58469-102
205-11	680MMF, 500V DCW CAP. •	C58469-102
205-12	680MMF, 500V DCW CAP. •	C58469-102
205-13	680MMF, 500V DCW CAP. •	C58469-102
205-14	680MMF, 500V DCW CAP. •	C58469-102
205-15	680MMF, 500V DCW CAP. •	C58469-102
205-16	680MMF, 500V DCW CAP. •	C58469-102
205-17	680MMF, 500V DCW CAP. •	C58469-102
205-18	680MMF, 500V DCW CAP. •	C58469-102
206	100,000 OHMS, ½W RES.	C58469-102
207	560,000 OHMS, ½W RES.	C58469-102
208	330 OHMS, ½W RES.	C58469-102
209	120,000 OHMS, ½W RES.	C58469-102
210	39,000 OHMS, ½W RES.	C58469-102

REF. NO.	DESCRIPTION	DWG. NO.
211-1	1,000 OHMS, ½W RES.	A102975-102
211-2	1,000 OHMS, ½W RES.	A102975-102
212	R.F. PLATE COIL	A105065
213	MIXER GRID COIL	A105066
214	DOUBLER PLATE COIL	A104311
215-1	47MMF, 500V DCW CAP.	C58469-470
215-2	47MMF, 500V DCW CAP.	C58469-470
216	1.8 MEGOHMS ½W RES.	A102975-185
217	270,000 OHMS ½W RES.	A102975-274
218	GANG CAP. (2 SEC)	L72798-2
219-1	4,700 OHMS ½W RES.	A102975-472
219-2	4,700 OHMS ½W RES.	A102975-472
220	56,000 OHMS ½W RES.	A102975-563
221	560 OHMS ½W RES.	A102975-561
222	27,000 OHMS ½W RES.	A102975-273
223	H.F. OSC. COIL	A105061

REF. NO.	DESCRIPTION	DWG. NO.
224	27MMF, 500V DCW CAP.	C58469-270
225	150MMF, 500V DCW CAP.	C58469-151
226	47,000 OHMS ½W RES.	A102975-473
227-1	15MMF, 500V DCW CAP.	A25715-15
227-2	15MMF, 500V DCW CAP.	A25715-15
227-3	15MMF, 500V DCW CAP.	A25715-15
227-4	15MMF, 500V DCW CAP.	A25715-15
227-5	15MMF, 500V DCW CAP.	A25715-15
227-6	15MMF, 500V DCW CAP.	A25715-15
227-7	15MMF, 500V DCW CAP.	A25715-15
227-8	15MMF, 500V DCW CAP.	A25715-15
228-1	60MMF, 500V DCW CAP.	C58495-600
228-2	60MMF, 500V DCW CAP.	C58495-600
228-3	60MMF, 500V DCW CAP.	C58495-600
228-4	60MMF, 500V DCW CAP.	C58495-600
228-5	60MMF, 500V DCW CAP.	C58495-600

REF. NO.	DESCRIPTION	DWG. NO.
228-6	60MMF, 500V DCW CAP.	C58495-600
228-7	60MMF, 500V DCW CAP.	C58495-600
228-8	60MMF, 500V DCW CAP.	C58495-600
229-1	IF COIL	AA104206-1
229-2	IF COIL	AA104206-1
229-3	IF COIL	AA104206-1
229-4	IF COIL	AA104206-1
229-5	IF COIL	AA104206-1
229-6	IF COIL	AA104206-1
229-7	IF COIL	AA104206-1
229-8	IF COIL	AA104206-1
230-1	.0068MFD, 500V DCW CAP.	A102967-8
230-2	.0068MFD, 500V DCW CAP.	A102967-8
230-3	.0068MFD, 500V DCW CAP.	A102967-8
230-4	.0068MFD, 500V DCW CAP.	A102967-8
230-5	.0068MFD, 500V DCW CAP.	A102967-8

* ANY VALU
1000 MMF
IS ACCEPT

** ANY VALU
.01MFD TO
IS ACCEPT

Revised 1 April 1956

Attn: Dallas Watson

FAIR RADIO SALES CO., INC.
P. O. BOX 1105
LIMA, OHIO 45802
419-227-6573

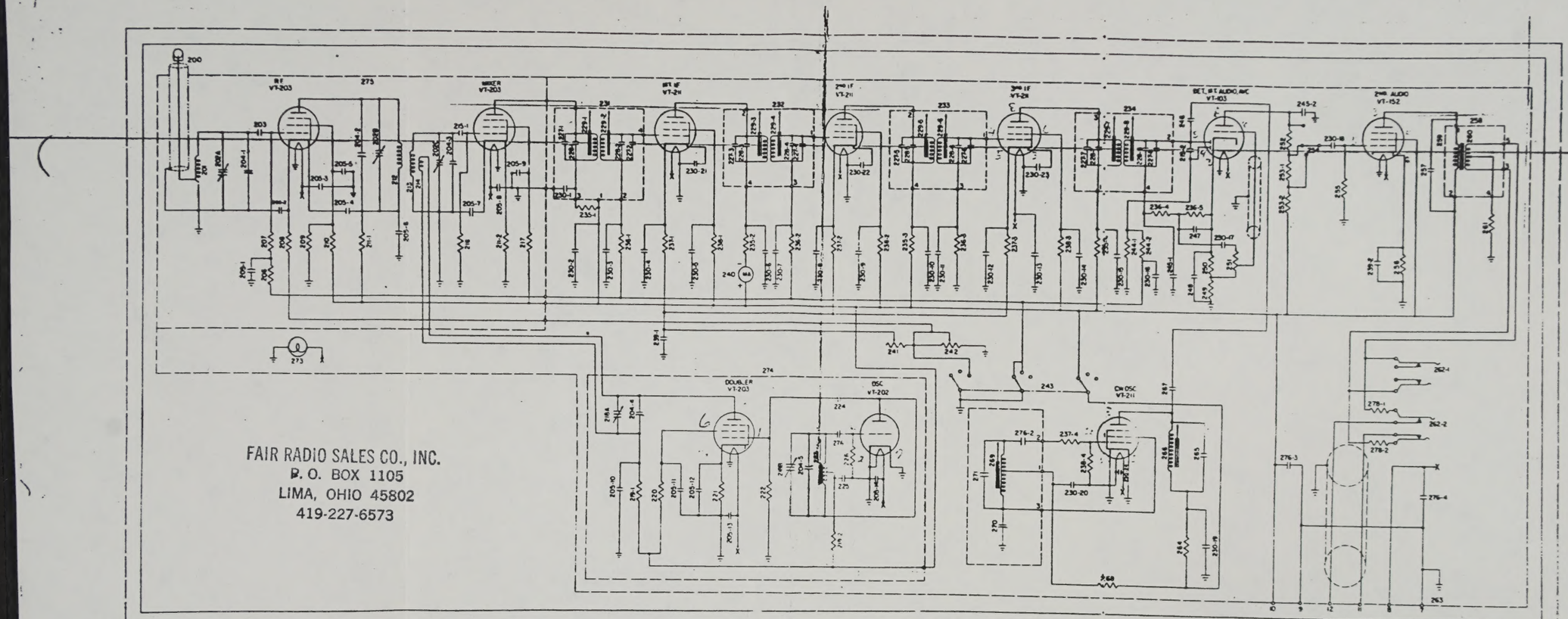

REF.
230-8
230-7
230-8
230-9
230-10
230-11
230-12
230-13
230-14
230-15
230-16
230-17
230-18
230-19
230-20
230-21
230-22
230-23
231
232
233
234
235-1
235-2
235-3
235-4
236-1
236-2
236-3
236-4
236-5
237-1
237-2
237-3
237-4
238-1
238-2
238-3
238-4
239-1
239-2
240
241
242
243
244-1
244-2
245-1
245-2
246

REF NO.	DESCRIPTION	DWG NO.
200	ANTENNA PLUG	C58585
201	ANTENNA COIL	A105064
202	GANG CAP (3 SEC)	L72799-2
203	15MMF, 500V DCW CAP.	C58469-150
204-1	TRIMMER CAP.	L72799-2
204-2	TRIMMER CAP.	L72799-2
204-3	TRIMMER CAP.	L72799-2
204-4	TRIMMER CAP.	L72799-2
204-5	TRIMMER CAP.	L72799-2
205-1	680MMF, 500V DCW CAP. •	C58469-102
205-2	680MMF, 500V DCW CAP. •	C58469-102
205-3	680MMF, 500V DCW CAP. •	C58469-102
205-4	680MMF, 500V DCW CAP. •	C58469-102
205-5	680MMF, 500V DCW CAP. •	C58469-102
205-6	680MMF, 500V DCW CAP. •	C58469-102
205-7	680MMF, 500V DCW CAP. •	C58469-102

REF. NO.	DESCRIPTION	DWG. NO.
205-8	680MMF, 500V DCW CAP. •	C58469-102
205-9	680MMF, 500V DCW CAP. •	C58469-102
205-10	680MMF, 500V DCW CAP. •	C58469-102
205-11	680MMF, 500V DCW CAP. •	C58469-102
205-12	680MMF, 500V DCW CAP. •	C58469-102
205-13	680MMF, 500V DCW CAP. •	C58469-102
205-14	680MMF, 500V DCW CAP. •	C58469-102
205-15	680MMF, 500V DCW CAP. •	C58469-102
205-16	680MMF, 500V DCW CAP. •	C58469-102
205-17	680MMF, 500V DCW CAP. •	C58469-102
205-18	680MMF, 500V DCW CAP. •	C58469-102
206	100,000 OHMS, ½W RES.	A102975-104
207	560,000 OHMS, ½W RES.	A102975-564
208	330 OHMS, ½W RES.	A102975-331
209	120,000 OHMS, ½W RES.	A102975-124
210	39,000 OHMS, ½W RES.	A18004-393

REF. NO.	DESCRIPTION	DWG. NO.
211-1	1,000 OHMS, ½W RES.	A102975-102
211-2	1,000 OHMS, ½W RES.	A102975-102
212	R.F. PLATE COIL	A105065
213	MIXER GRID COIL	A105066
214	DOUBLER PLATE COIL	A104311
215-1	47MMF, 500V DCW CAP.	C58469-470
215-2	47MMF, 500V DCW CAP.	C58469-470
216	1.8 MEGOHMS ½W RES.	A102975-185
217	270,000 OHMS ½W RES.	A102975-274
218	GANG CAP. (2 SEC)	L72798-2
219-1	4,700 OHMS ½W RES.	A102975-472
219-2	4,700 OHMS ½W RES.	A102975-472
220	56,000 OHMS ½W RES.	A102975-563
221	560 OHMS ½W RES.	A102975-561
222	27,000 OHMS ½W RES.	A102975-273
223	H.F. OSC. COIL	A105061

REF. NO.	DESCRIPTION	DWG. NO.
224	27MMF, 500V DCW CAP.	C58469-270
225	150MMF, 500V DCW CAP.	C58469-151
226	47,000 OHMS ½W RES.	A102975-473
227-1	15MMF, 500V DCW CAP.	A25715-15
227-2	15MMF, 500V DCW CAP.	A25715-15
227-3	15MMF, 500V DCW CAP.	A25715-15
227-4	15MMF, 500V DCW CAP.	A25715-15
227-5	15MMF, 500V DCW CAP.	A25715-15
227-6	15MMF, 500V DCW CAP.	A25715-15
227-7	15MMF, 500V DCW CAP.	A25715-15
227-8	15MMF, 500V DCW CAP.	A25715-15
228-1	60MMF, 500V DCW CAP.	C58495-600
228-2	60MMF, 500V DCW CAP.	C58495-600
228-3	60MMF, 500V DCW CAP.	C58495-600
228-4	60MMF, 500V DCW CAP.	C58495-600
228-5	60MMF, 500V DCW CAP.	C58495-600

REF. NO.	DESCRIPTION	DWG. NO.
228-6	60MMF, 500V DCW CAP.	C58495-600
228-7	60MMF, 500V DCW CAP.	C58495-600
228-8	60MMF, 500V DCW CAP.	C58495-600
229-1	IF COIL	AA1B0206-1
229-2	IF COIL	AA1B0206-1
229-3	IF COIL	AA1B0206-1
229-4	IF COIL	AA1B0206-1
229-5	IF COIL	AA1B0206-1
229-6	IF COIL	AA1B0206-1
229-7	IF COIL	AA1B0206-1
229-8	IF COIL	AA1B0206-1
230-1	.0068MFD, 500V DCW CAP.	A102967-8
230-2	.0068MFD, 500V DCW CAP.	A102967-8
230-3	.0068MFD, 500V DCW CAP.	A102967-8
230-4	.0068MFD, 500V DCW CAP.	A102967-8
230-5	.0068MFD, 500V DCW CAP.	A102967-8

Revised 1 April 19

P.01

TRANSACTION REPORT

APR-10-90 TUE 9:34

DATE	START	RECEIVER	TX TIME	PAGES	NOTE
APR-10	9:33	17137765651	1'11"	1	OK

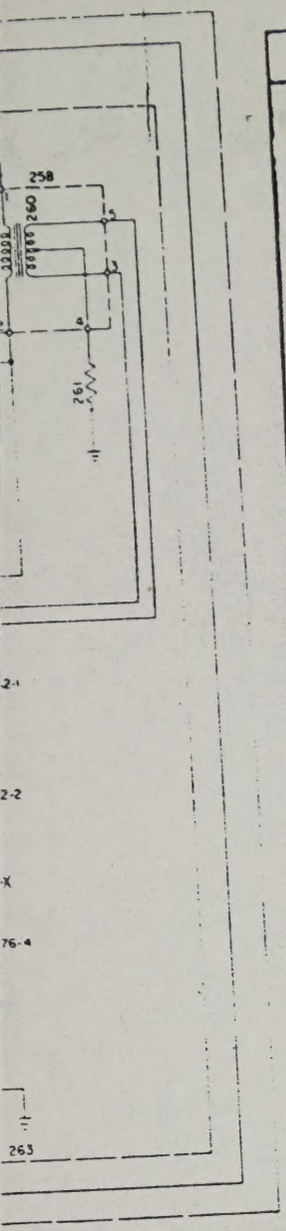

REF. NO.	DESCRIPTION	DWG. NO.
230-6	.0068MFD, 500V DCW CAP. **	A102967-8
230-7	.0068MFD, 500V DCW CAP. **	A102967-8
230-8	.0068MFD, 500V DCW CAP. **	A102967-8
230-9	.0068MFD, 500V DCW CAP. **	A102967-8
230-10	.0068MFD, 500V DCW CAP. **	A102967-8
230-11	.0068MFD, 500V DCW CAP. **	A102967-8
230-12	.0068MFD, 500V DCW CAP. **	A102967-8
230-13	.0068MFD, 500V DCW CAP. **	A102967-8
230-14	.0068MFD, 500V DCW CAP. **	A102967-8
230-15	.0068MFD, 500V DCW CAP. **	A102967-8
230-16	.0068MFD, 500V DCW CAP. **	A102967-8
230-17	.0068MFD, 500V DCW CAP. **	A102967-8
230-18	.0068MFD, 500V DCW CAP. **	A102967-8
230-19	.0068MFD, 500V DCW CAP. **	A102967-8
230-20	.0068MFD, 500V DCW CAP. **	A102967-8
230-21	.0068MFD, 500V DCW CAP. **	A102967-8
230-22	.0068MFD, 500V DCW CAP. **	A102967-8
230-23	.0068MFD, 500V DCW CAP. **	A102967-8
231	1ST I.F. ASSEM.	AL73530-1
232	2ND I.F. ASSEM.	AL73531-1
233	3RD I.F. ASSEM.	AL73026-4
234	4TH I.F. ASSEM.	AL73028-2
235-1	1,000 OHMS, ½W RES.	A18001-102
235-2	1,000 OHMS, ½W RES.	A18001-102
235-3	1,000 OHMS, ½W RES.	A18001-102
235-4	1,000 OHMS, ½W RES.	A18001-102
236-1	100,000 OHMS, ½W RES.	A18001-104
236-2	100,000 OHMS, ½W RES.	A18001-104
236-3	100,000 OHMS, ½W RES.	A18001-104
236-4	100,000 OHMS, ½W RES.	A18001-104
236-5	100,000 OHMS, ½W RES.	A18001-104
237-1	220 OHMS, ½W RES.	A18001-221
237-2	220 OHMS, ½W RES.	A18001-221
237-3	220 OHMS, ½W RES.	A18001-221
237-4	220 OHMS, ½W RES.	A18001-221
238-1	47,000 OHMS ½W RES.	A18001-473
238-2	47,000 OHMS ½W RES.	A18001-473
238-3	47,000 OHMS ½W RES.	A18001-473
238-4	47,000 OHMS ½W RES.	A18001-473
239-1	1.0 MFD, 100V DCW CAP.	A104484
239-2	1.0 MFD, 100V DCW CAP.	A104484
240	0-10 MILLAMMETER	A104194-4
241	300 OHMS, THES. CONTROL	A105022
242	3000 OHMS, GAIN CONTROL	C58961
243	SELECTOR SWITCH	C58583
244-1	1 MEGOHM, ½W RES.	A102975-105
244-2	1 MEGOHM, ½W RES.	A102975-105
245-1	330 MMF, 500V DCW CAP.	C58469-331
245-2	330 MMF, 500V DCW CAP.	C58469-331
246	1.8 MMF, 500V DCW CAP.	C56336-18

REF. NO.	DESCRIPTION	DWG. NO.
247	220 MMF, 500V DCW CAP.	C58469-221
248	0.1 MFD, 400V DCW CAP.	A18015-104
249	18,000 OHMS, ½W RES.	A18001-183
250	2,200 OHMS, ½W RES.	A18001-222
251	1 MEG, VOLUME CONTROL	A102616
252	68,000 OHMS, ½W RES.	A102975-683
253-1	33,000 OHMS, ½W RES.	A102975-333
253-2	33,000 OHMS, ½W RES.	A102975-333
254	ATTENUATOR SWITCH	C58584
255	330,000 OHMS, ½W RES.	A102975-334
256	560 OHMS, 2W RES.	RC41BE561J
257	.0068 MFD, 500V DCW CAP.	A25714-7
258	OUTPUT TRANS.	A103058
259	PRI. OUTPUT TRANS.	A103058
260	SEC. OUTPUT TRANS.	A103058
261	4700 OHMS, ½W RES.	A18001-472
262-1	PHONE JACK	A103533
262-2	PHONE JACK	A103533
263	JONES PLUG	A105106
264	4700 OHMS, ½W RES.	A18004-472
265	100 MMF, 500V DCW CAP.	C56317-101
266	C.W. OSC. PLATE COIL	AA106068
267	4.7 MMF, 500V DCW CAP.	C58469-47
268	47,000 OHMS, ½W RES.	A18004-473
269	C.W. OSC. GRID COIL	A105036-1
270	VARIABLE CAP.	A105041
271	390 MMF, 500V DCW CAP.	C56317-391
272	C.W. OSC. COIL ASSEM.	C58590-1
273	DIAL LIGHT ASSEM.	A104910
274	H.F. OSC. ASSEMBLY	AN91052-1
275	R.F. ASSEMBLY	AN91050-1
276-1	.001MFD, 500V DCW CAP.	C58469-102
276-2	.001MFD, 500V DCW CAP.	C58469-102
276-3	.001MFD, 500V DCW CAP.	C58469-102
276-4	.001MFD, 500V DCW CAP.	C58469-102
278-1	330 OHMS, 1W RES.	RC30BE331K
278-2	330 OHMS, 1W RES.	RC30BE331K
VT-103	DET., 1ST AUDIO, AVC	
VT-152	2ND AUDIO	
VT-202	H.F. OSC.	
VT-203	R.F. AMPLIFIER	
VT-203	MIXER	
VT-203	DOUBLER	
VT-211	1ST I.F.	
VT-211	2ND I.F.	
VT-211	3RD I.F.	
VT-211	C.W. OSC.	

TION	DWG. NO.
500V DCW CAP.	C58495-600
500V DCW CAP.	C58495-600
500V DCW CAP.	C58495-600
	AA104206-1
	AA104206-1
	AA104206-1
	AA104206-1
	AA104206-1
	AA104206-1
	AA104206-1
	AA104206-1
D, 500V DCW CAP. **	A102967-8
D, 500V DCW CAP. **	A102967-8
O, 500V DCW CAP. **	A102967-8
D, 500V DCW CAP. **	A102967-8
D, 500V DCW CAP. **	A102967-8

* ANY VALUE FROM 1000 MMF TO 600 MMF. IS ACCEPTABLE.

** ANY VALUE FROM .01MFD TO .006 MFD IS ACCEPTABLE.

Figure 22 – Radio Receiver BC-639-A, Schematic Diagram

62A-62B

Revised 1 April 1956

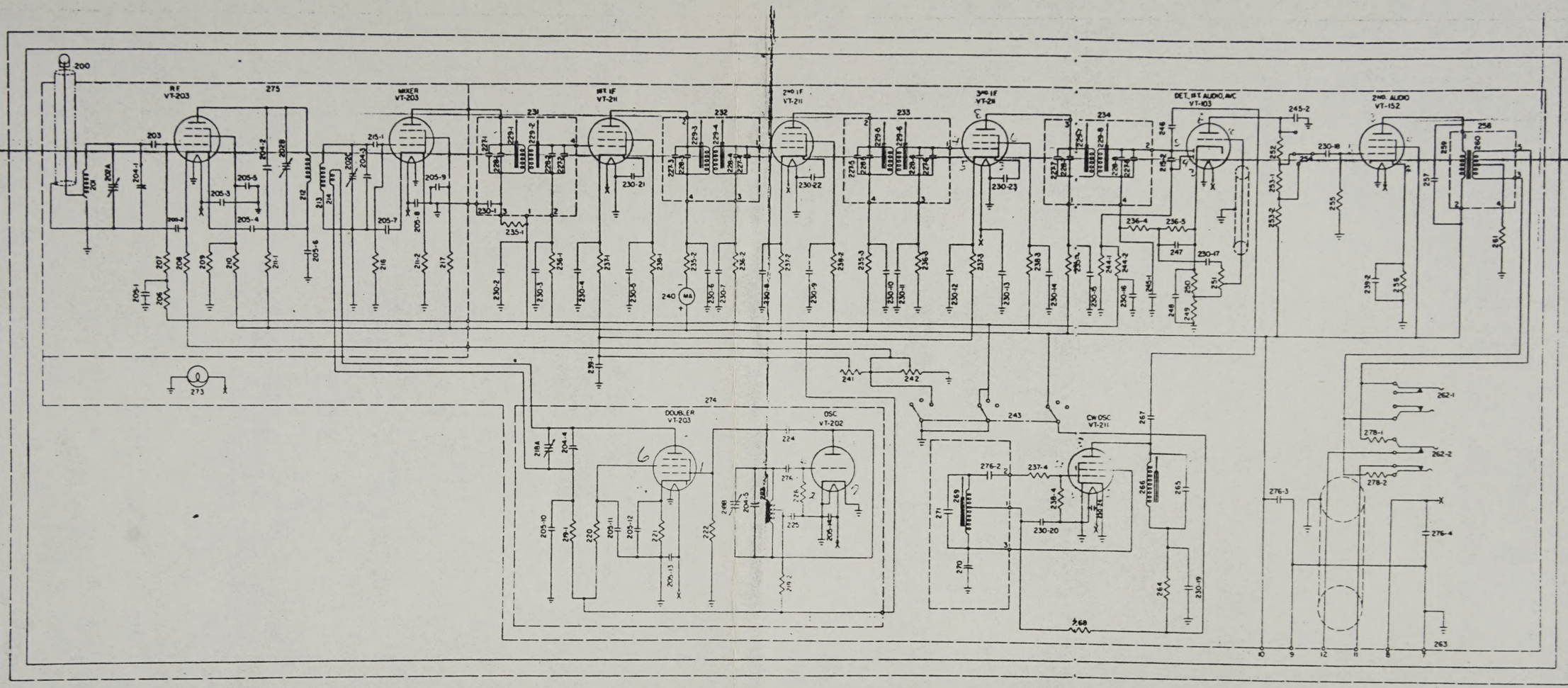

REF NO.	DESCRIPTION	DWG NO.
200	ANTENNA PLUG	C58585
201	ANTENNA COIL	A105064
202	GANG CAP (3 SEC)	L72799-2
203	15MMF, 500V DCW CAP.	C58469-150
204-1	TRIMMER CAP.	L72799-2
204-2	TRIMMER CAP.	L72799-2
204-3	TRIMMER CAP.	L72799-2
204-4	TRIMMER CAP.	L72799-2
204-5	TRIMMER CAP.	L72799-2
205-1	680MMF, 500V DCW CAP. •	C58469-102
205-2	680MMF, 500V DCW CAP. •	C58469-102
205-3	680MMF, 500V DCW CAP. •	C58469-102
205-4	680MMF, 500V DCW CAP. •	C58469-102
205-5	680MMF, 500V DCW CAP. •	C58469-102
205-6	680MMF, 500V DCW CAP. •	C58469-102
205-7	680MMF, 500V DCW CAP. •	C58469-102

REF. NO.	DESCRIPTION	DWG. NO.
205-8	680MMF, 500V DCW CAP. •	C58469-102
205-9	680MMF, 500V DCW CAP. •	C58469-102
205-10	680MMF, 500V DCW CAP. •	C58469-102
205-11	680MMF, 500V DCW CAP. •	C58469-102
205-12	680MMF, 500V DCW CAP. •	C58469-102
205-13	680MMF, 500V DCW CAP. •	C58469-102
205-14	680MMF, 500V DCW CAP. •	C58469-102
205-15	680MMF, 500V DCW CAP. •	C58469-102
205-16	680MMF, 500V DCW CAP. •	C58469-102
205-17	680MMF, 500V DCW CAP. •	C58469-102
205-18	680MMF, 500V DCW CAP. •	C58469-102
206	100,000 OHMS, ½W RES.	A102975-104
207	560,000 OHMS, ½W RES.	A102975-564
208	330 OHMS, ½W RES.	A102975-331
209	120,000 OHMS, ½W RES.	A102975-124
210	39,000 OHMS, ½W RES.	A18004-393

REF. NO.	DESCRIPTION	DWG. NO.
211-1	1,000 OHMS, ½W RES.	A102975-102
211-2	1,000 OHMS, ½W RES.	A102975-102
212	R.F. PLATE COIL	A105065
213	MIXER GRID COIL	A105066
214	DOUBLER PLATE COIL	A104311
215-1	47MMF, 500V DCW CAP.	C58469-470
215-2	47MMF, 500V DCW CAP.	C58469-470
216	1.8 MEGOHMS ½W RES.	A102975-185
217	270,000 OHMS ½W RES.	A102975-274
218	GANG CAP. (2 SEC)	L72798-2
219-1	4,700 OHMS ½W RES.	A102975-472
219-2	4,700 OHMS ½W RES.	A102975-472
220	56,000 OHMS ½W RES.	A102975-563
221	560 OHMS ½W RES.	A102975-561
222	27,000 OHMS ½W RES.	A102975-273
223	H.F. OSC. COIL	A105061

REF. NO.	DESCRIPTION	DWG. NO.
224	27MMF, 500V DCW CAP.	C58469-270
225	150MMF, 500V DCW CAP.	C58469-151
226	47,000 OHMS ½W RES.	A102975-473
227-1	15MMF, 500V DCW CAP.	A25715-15
227-2	15MMF, 500V DCW CAP.	A25715-15
227-3	15MMF, 500V DCW CAP.	A25715-15
227-4	15MMF, 500V DCW CAP.	A25715-15
227-5	15MMF, 500V DCW CAP.	A25715-15
227-6	15MMF, 500V DCW CAP.	A25715-15
227-7	15MMF, 500V DCW CAP.	A25715-15
227-8	15MMF, 500V DCW CAP.	A25715-15
228-1	60MMF, 500V DCW CAP.	C58495-600
228-2	60MMF, 500V DCW CAP.	C58495-600
228-3	60MMF, 500V DCW CAP.	C58495-600
228-4	60MMF, 500V DCW CAP.	C58495-600
228-5	60MMF, 500V DCW CAP.	C58495-600

REF. NO.	DESCRIPTION	DWG. NO.
228-6	60MMF, 500V DCW CAP.	C58495-600
228-7	60MMF, 500V DCW CAP.	C58495-600
228-8	60MMF, 500V DCW CAP.	C58495-600
229-1	IF COIL	AA104206-1
229-2	IF COIL	AA104206-1
229-3	IF COIL	AA104206-1
229-4	IF COIL	AA104206-1
229-5	IF COIL	AA104206-1
229-6	IF COIL	AA104206-1
229-7	IF COIL	AA104206-1
229-8	IF COIL	AA104206-1
230-1	.0068MFD, 500V DCW CAP.	A102967-8
230-2	.0068MFD, 500V DCW CAP.	A102967-8
230-3	.0068MFD, 500V DCW CAP.	A102967-8
230-4	.0068MFD, 500V DCW CAP.	A102967-8
230-5	.0068MFD, 500V DCW CAP.	A102967-8

Revised 1 April 19

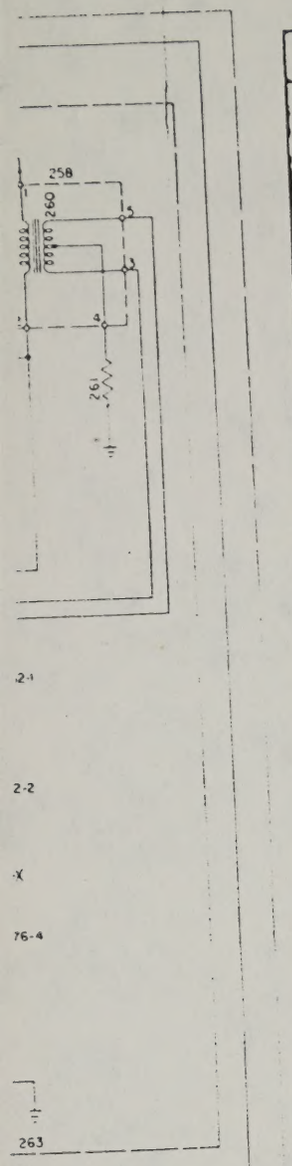

REF. NO.	DESCRIPTION	DWG. NO.
230-6	.0068MFD, 500V DCW CAP. *	A102967-8
230-7	.0068MFD, 500V DCW CAP. **	A102967-8
230-8	.0068MFD, 500V DCW CAP. *	A102967-8
230-9	.0068MFD, 500V DCW CAP. *	A102967-8
230-10	.0068MFD, 500V DCW CAP. *	A102967-8
230-11	.0068MFD, 500V DCW CAP. **	A102967-8
230-12	.0068MFD, 500V DCW CAP. *	A102967-8
230-13	.0068MFD, 500V DCW CAP. *	A102967-8
230-14	.0068MFD, 500V DCW CAP. *	A102967-8
230-15	.0068MFD, 500V DCW CAP. *	A102967-8
230-16	.0068MFD, 500V DCW CAP. **	A102967-8
230-17	.0068MFD, 500V DCW CAP. *	A102967-8
230-18	.0068MFD, 500V DCW CAP. **	A102967-8
230-19	.0068MFD, 500V DCW CAP. *	A102967-8
230-20	.0068MFD, 500V DCW CAP. *	A102967-8
230-21	.0068MFD, 500V DCW CAP. **	A102967-8
230-22	.0068MFD, 500V DCW CAP. *	A102967-8
230-23	.0068MFD, 500V DCW CAP. **	A102967-8
231	1ST I.F. ASSEM.	AL73530-1
232	2ND I.F. ASSEM.	AL73531-1
233	3RD I.F. ASSEM.	AL73026-4
234	4TH I.F. ASSEM.	AL73028-2
235-1	1,000 OHMS, $\frac{1}{4}$W RES.	A18001-102
235-2	1,000 OHMS, $\frac{1}{4}$W RES.	A18001-102
235-3	1,000 OHMS, $\frac{1}{4}$W RES.	A18001-102
235-4	1,000 OHMS, $\frac{1}{4}$W RES.	A18001-102
236-1	100,000 OHMS, $\frac{1}{4}$W RES.	A18001-104
236-2	100,000 OHMS, $\frac{1}{4}$W RES.	A18001-104
236-3	100,000 OHMS, $\frac{1}{4}$W RES.	A18001-104
236-4	100,000 OHMS, $\frac{1}{4}$W RES.	A18001-104
236-5	100,000 OHMS, $\frac{1}{4}$W RES.	A18001-104
237-1	220 OHMS, $\frac{1}{4}$W RES.	A18001-221
237-2	220 OHMS, $\frac{1}{4}$W RES.	A18001-221
237-3	220 OHMS, $\frac{1}{4}$W RES.	A18001-221
237-4	220 OHMS, $\frac{1}{4}$W RES.	A18001-221
238-1	47,000 OHMS $\frac{1}{4}$W RES.	A18001-473
238-2	47,000 OHMS $\frac{1}{4}$W RES.	A18001-473
238-3	47,000 OHMS $\frac{1}{4}$W RES.	A18001-473
238-4	47,000 OHMS $\frac{1}{4}$W RES.	A18001-473
239-1	1.0 MFD, 100V DCW CAP.	A104484
239-2	1.0 MFD, 100V DCW CAP.	A104484
240	0-10 MILLAMMETER	A104194-4
241	300 OHMS, THES. CONTROL	A105022
242	3000 OHMS, GAIN CONTROL	C58961
243	SELECTOR SWITCH	C58583
244-1	1 MEGOHM, $\frac{1}{2}$W RES.	A102975-105
244-2	1 MEGOHM, $\frac{1}{2}$W RES.	A102975-105
245-1	330 MMF, 500V DCW CAP.	C58469-331
245-2	330 MMF, 500V DCW CAP.	C58469-331
246	1.8 MMF, 500V DCW CAP.	C56336-18
247	220 MMF, 500V DCW CAP.	C58469-221
248	0.1 MFD, 400V DCW CAP.	A18015-104
249	18,000 OHMS, $\frac{1}{4}$W RES.	A18001-183
250	2,200 OHMS, $\frac{1}{4}$W RES.	A18001-222
251	1 MEG, VOLUME CONTROL	A102616
252	68,000 OHMS, $\frac{1}{2}$W RES.	A102975-683
253-1	33,000 OHMS, $\frac{1}{2}$W RES.	A102975-333
253-2	33,000 OHMS, $\frac{1}{2}$W RES.	A102975-333
254	ATTENUATOR SWITCH	C58584
255	330,000 OHMS, $\frac{1}{2}$W RES.	A102975-334
256	560 OHMS, 2W RES.	RC41BE561J
257	.0068 MFD, 500V DCW CAP.	A25714-7
258	OUTPUT TRANS.	A103058
259	PRI. OUTPUT TRANS.	A103058
260	SEC. OUTPUT TRANS.	A103058
261	4700 OHMS, $\frac{1}{4}$W RES.	A18001-472
262-1	PHONE JACK	A103533
262-2	PHONE JACK	A103533
263	JONES PLUG	A105106
264	4700 OHMS, $\frac{1}{2}$W RES.	A18004-472
265	100 MMF, 500V DCW CAP.	C56317-101
266	C.W. OSC. PLATE COIL	AA106068
267	4.7 MMF, 500V DCW CAP.	C58469-47
268	47,000 OHMS, $\frac{1}{2}$W RES.	A18004-473
269	C.W. OSC. GRID COIL	A105036-1
270	VARIABLE CAP.	A105041
271	390 MMF, 500V DCW CAP.	C56317-391
272	C.W. OSC. COIL ASSEM.	C58590-1
273	DIAL LIGHT ASSEM.	A104910
274	H.F. OSC. ASSEMBLY	AN91052-1
275	R.F. ASSEMBLY	AN91050-1
276-1	.001MFD, 500V DCW CAP.	C58469-102
276-2	.001MFD, 500V DCW CAP.	C58469-102
276-3	.001MFD, 500V DCW CAP.	C58469-102
276-4	.001MFD, 500V DCW CAP.	C58469-102
278-1	330 OHMS, 1W RES.	RC30BE331K
278-2	330 OHMS, 1W RES.	RC30BE331K
VT-103	DET., 1ST AUDIO, AVC	
VT-152	2ND AUDIO	
VT-202	H.F. OSC.	
VT-203	R.F. AMPLIFIER	
VT-203	MIXER	
VT-203	DOUBLER	
VT-211	1ST I.F.	
VT-211	2ND I.F.	
VT-211	3RD I.F.	
VT-211	C.W. OSC.	

TION	DWG. NO.
500V DCW CAP.	C58495-600
500V DCW CAP.	C58495-600
500V DCW CAP.	C58495-600
	AA104206-1
	AA104206-1
	AA104206-1
	AA104206-1
	AA104206-1
	AA104206-1
	AA104206-1
	AA104206-1
	AA104206-1
D, 500V DCW CAP. *	A102967-8
D, 500V DCW CAP. **	A102967-8
D, 500V DCW CAP. **	A102967-8
D, 500V DCW CAP. *	A102967-8
D, 500V DCW CAP. **	A102967-8

* ANY VALUE FROM 1000 MMF TO 600 MMF. IS ACCEPTABLE.

** ANY VALUE FROM .01MFD TO .006 MFD IS ACCEPTABLE.

Figure 22 – Radio Receiver BC-639-A, Schematic Diagram

62A-62B

Revised 1 April 1956

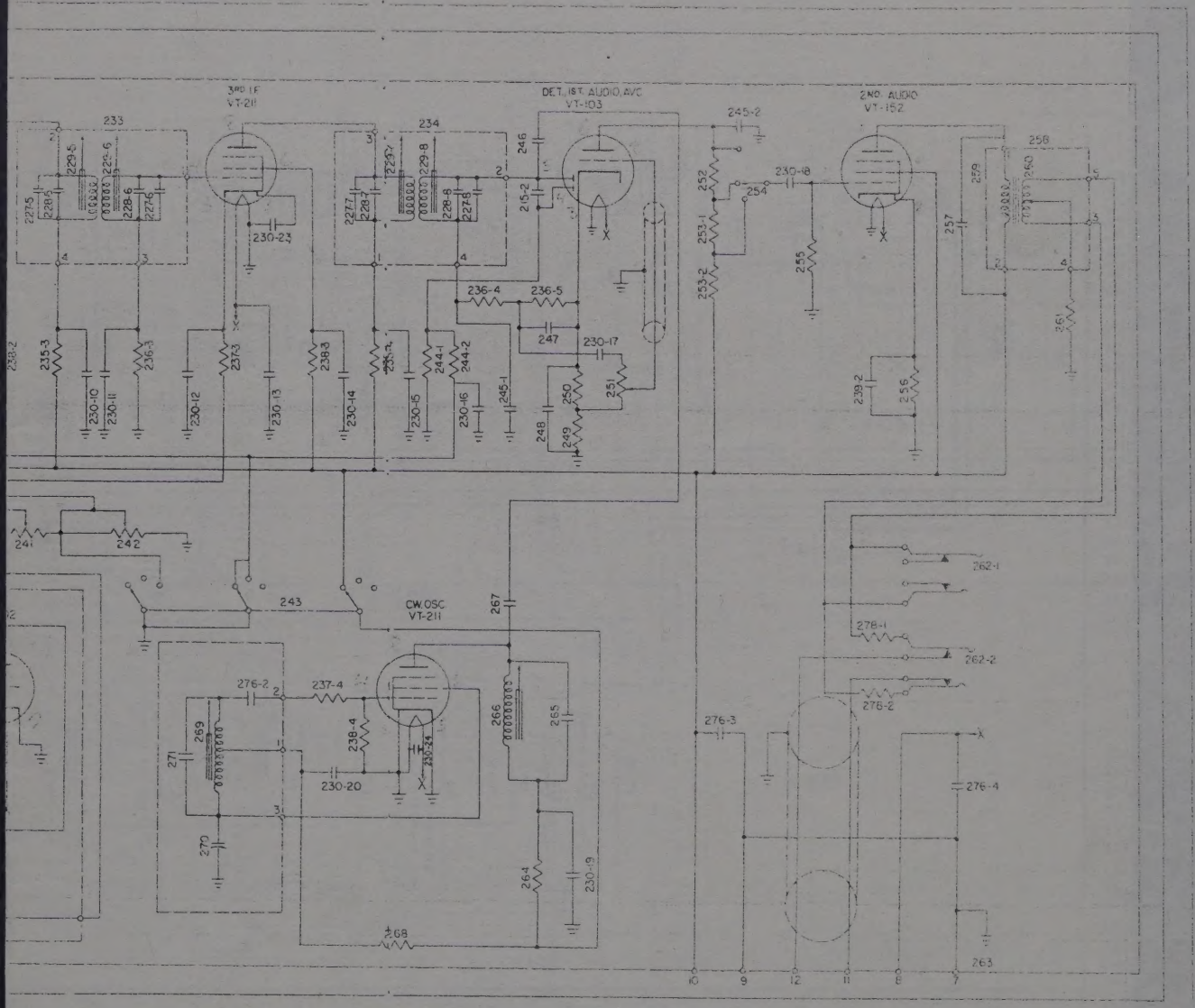

	DWG. NO.	REF. NO.	DESCRIPTION	DWG. NO.	REF. NO.	DESCRIPTION	DWG. NO.
	A102975-102	224	27MMF, 500V DCW CAP.	C58469-270	228-6	60MMF, 500V DCW CAP.	C58495-600
	A102975-102	225	150MMF, 500V DCW CAP.	C58469-151	228-7	60MMF, 500V DCW CAP.	C58495-600
	A105065	226	47,000 OHMS ½W RES.	A102975-473	228-8	60MMF, 500V DCW CAP.	C58495-600
	A105066	227-1	15MMF, 500V DCW CAP.	A25715-15	229-1	IF COIL	AA104206-1
OIL	A104311	227-2	15MMF, 500V DCW CAP.	A25715-15	229-2	IF COIL	AA104206-1
AP.	C58469-470	227-3	15MMF, 500V DCW CAP.	A25715-15	229-3	IF COIL	AA104206-1
AP.	C58469-470	227-4	15MMF, 500V DCW CAP.	A25715-15	229-4	IF COIL	AA104206-1
ES.	A102975-185	227-5	15MMF, 500V DCW CAP.	A25715-15	229-5	IF COIL	AA104206-1
ES.	A102975-274	227-6	15MMF, 500V DCW CAP.	A25715-15	229-6	IF COIL	AA104206-1
	L72798-2	227-7	15MMF, 500V DCW CAP.	A25715-15	229-7	IF COIL	AA104206-1
	A102975-472	227-8	15MMF, 500V DCW CAP.	A25715-15	229-8	IF COIL	AA104206-1
	A102975-472	228-1	60MMF, 500V DCW CAP.	C58495-600	230-1	.0068MFD, 500V DCW CAP.	A102967-8
S.	A102975-563	228-2	60MMF, 500V DCW CAP.	C58495-600	230-2	.0068MFD, 500V DCW CAP.	A102967-8
	A102975-561	228-3	60MMF, 500V DCW CAP.	C58495-600	230-3	.0068MFD, 500V DCW CAP.	A102967-8

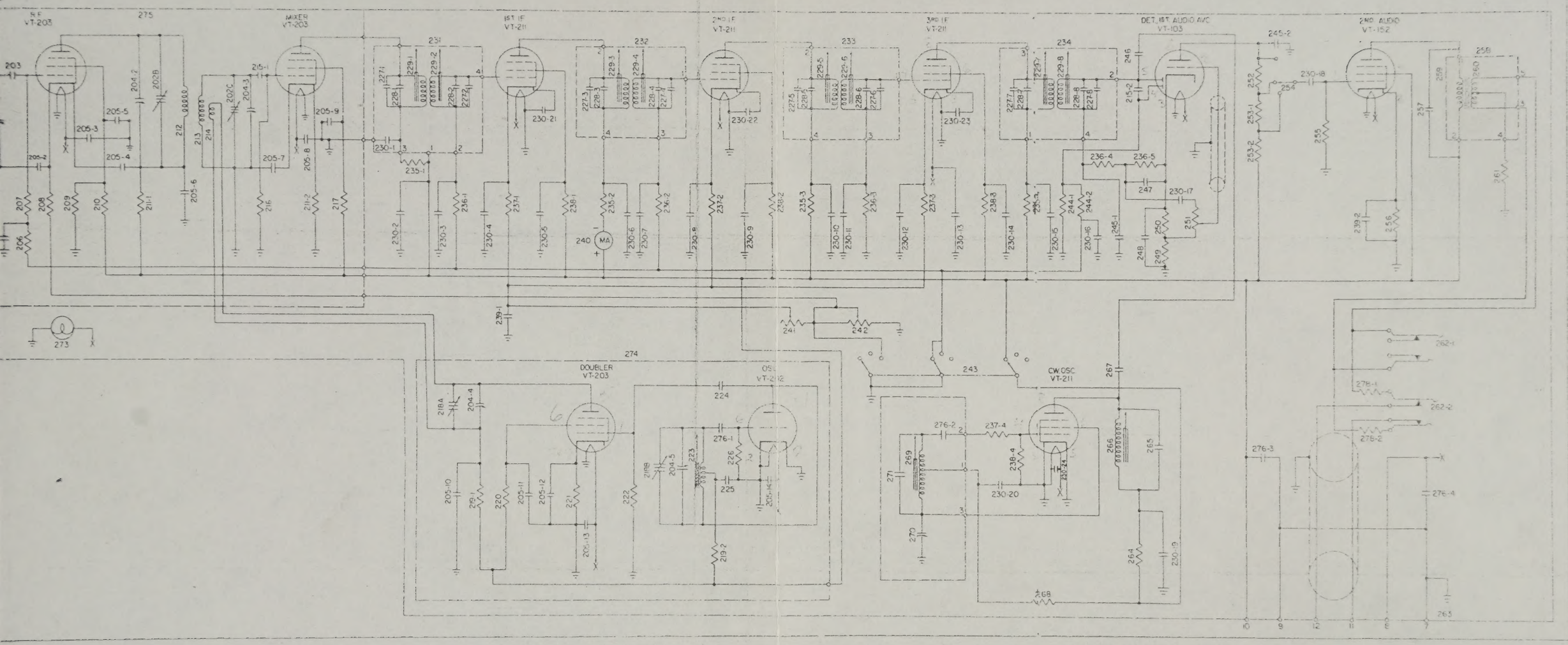

TION	DWG NO.	REF. NO.	DESCRIPTION	DWG. NO.	REF. NO.	DESCRIPTION	DWG. NO.	REF. NO.	DESCRIPTION	DWG. NO.	REF. NO.	DESCRIPTION	DWG. NO.
PLUG	C58585	205-8	680MMF, 500V DCW CAP. ±	C58469-102	211-1	1,000 OHMS, ½W RES.	A102975-102	224	27MMF, 500V DCW CAP.	C58469-270	228-6	60MMF, 500V DCW CAP.	C58495-600
COIL	A105064	205-9	680MMF, 500V DCW CAP. ±	C58469-102	211-2	1,000 OHMS, ½W RES.	A102975-102	225	150MMF, 500V DCW CAP.	C58469-151	228-7	60MMF, 500V DCW CAP.	C58495-600
(3 SEC)	L72799-2	205-10	680MMF, 500V DCW CAP. ±	C58469-102	212	R.F. PLATE COIL	A105065	226	47,000 OHMS ½W RES.	A102975-473	228-8	60MMF, 500V DCW CAP.	C58495-600
0V DCW CAP.	C58469-150	205-11	680MMF, 500V DCW CAP. ±	C58469-102	213	MIXER GRID COIL	A105066	227-1	15MMF, 500V DCW CAP.	A25715-15	229-1	IF COIL	AA104206-1
CAP.	L72799-2	205-12	680MMF, 500V DCW CAP. ±	C58469-102	214	DOUBLER PLATE COIL	A104311	227-2	15MMF, 500V DCW CAP.	A25715-15	229-2	IF COIL	AA104206-1
CAP.	L72799-2	205-13	680MMF, 500V DCW CAP. ±	C58469-102	215-1	47MMF, 500V DCW CAP.	C58469-470	227-3	15MMF, 500V DCW CAP.	A25715-15	229-3	IF COIL	AA104206-1
CAP	L72799-2	205-14	680MMF, 500V DCW CAP. ±	C58469-102	215-2	47MMF, 500V DCW CAP.	C58469-470	227-4	15MMF, 500V DCW CAP.	A25715-15	229-4	IF COIL	AA104206-1
CAP.	L72799-2	205-15	680MMF, 500V DCW CAP. ±	C58469-102	216	1.8 MEGOHMS ½W RES.	A102975-185	227-5	15MMF, 500V DCW CAP.	A25715-15	229-5	IF COIL	AA104206-1
CAP.	L72799-2	205-16	680MMF, 500V DCW CAP. ±	C58469-102	217	270,000 OHMS ½W RES.	A102975-274	227-6	15MMF, 500V DCW CAP.	A25715-15	229-6	IF COIL	AA104206-1
0V DCW CAP. ±	C58469-102	205-17	680MMF, 500V DCW CAP. ±	C58469-102	218	GANG CAP. (2 SEC)	L72798-2	227-7	15MMF, 500V DCW CAP.	A25715-15	229-7	IF COIL	AA104206-1
0V DCW CAP. ±	C58469-102	205-18	680MMF, 500V DCW CAP. ±	C58469-102	219-1	4,700 OHMS ½W RES.	A102975-472	227-8	15MMF, 500V DCW CAP.	A25715-15	229-8	IF COIL	AA104206-1
0V DCW CAP. ±	C58469-102	206	100,000 OHMS, ½W RES.	A102975-104	219-2	4,700 OHMS ½W RES.	A102975-472	228-1	60MMF, 500V DCW CAP.	C58495-600	230-1	.0068MFD, 500V DCW CAP. ±	A102967-8
0V DCW CAP. ±	C58469-102	207	560,000 OHMS, ½W RES.	A102975-564	220	56,000 OHMS ½W RES.	A102975-563	228-2	60MMF, 500V DCW CAP.	C58495-600	230-2	.0068MFD, 500V DCW CAP. ±	A102967-8
0V DCW CAP. ±	C58469-102	208	330 OHMS, ½W RES.	A102975-331	221	560 OHMS ½W RES.	A102975-561	228-3	60MMF, 500V DCW CAP.	C58495-600	230-3	.0068MFD, 500V DCW CAP. ±	A102967-8
		209	120,000 OHMS, ½W RES.	A102975-124	222	27,000 OHMS ½W RES.	A102975-273						

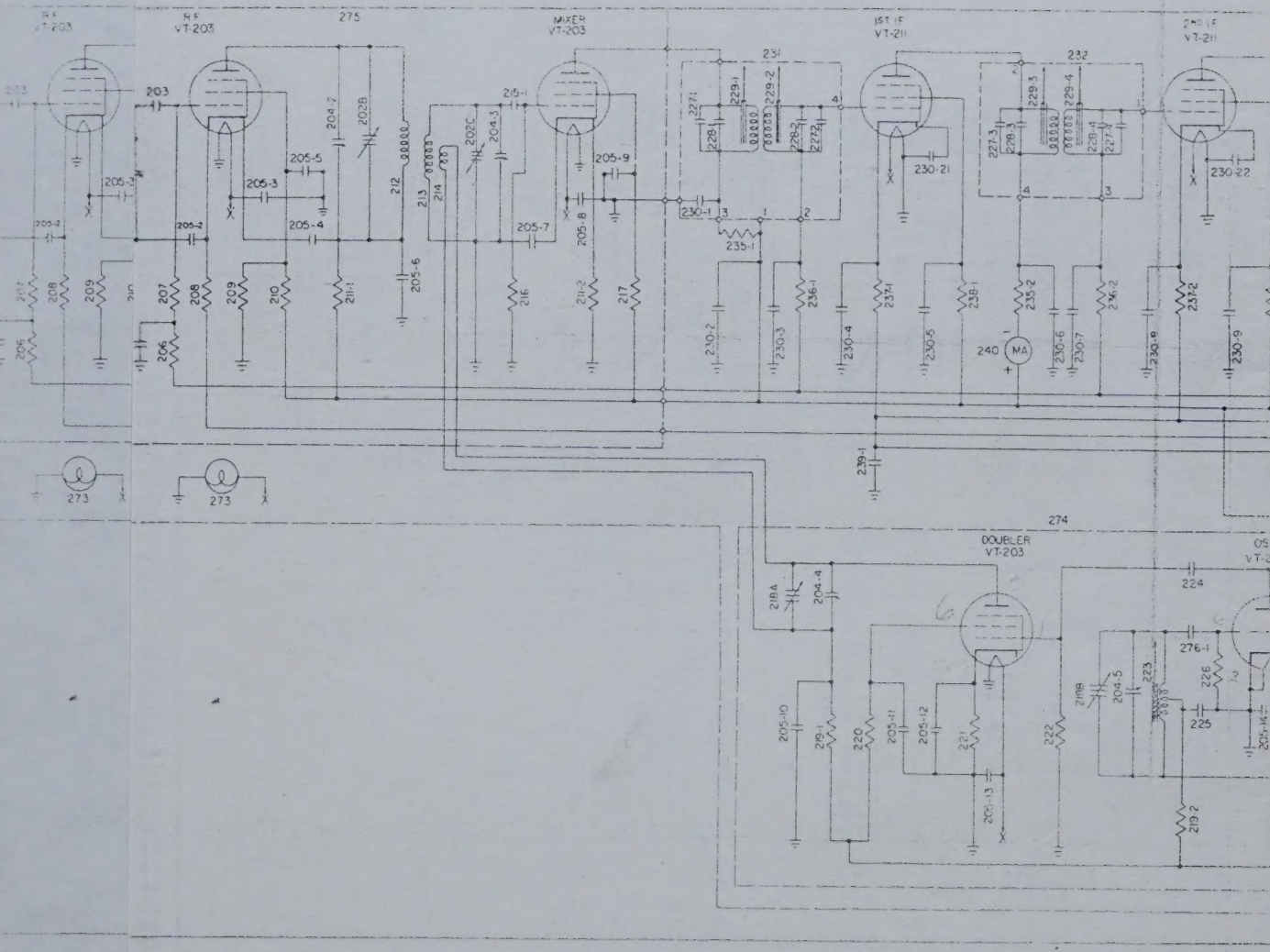

ON	TION	DWG NO.	REF. NO.	DESCRIPTION	DWG. NO.	REF. NO.	DESCRIPTION
PLUG	PLUG	C58585	205-8	680MMF, 500V DCW CAP. •	C58469-102	211-1	1,000 OHMS, ½W RE
OIL	COIL	A105064	205-9	680MMF, 500V DCW CAP. •	C58469-102	211-2	1,000 OHMS, ½W RE
3 SEC)	> 13 SEC)	L72799-2	205-10	680MMF, 500V DCW CAP. •	C58469-102	212	R.F. PLATE COIL
V DCW CAP.	0V DCW CAP.	C58469-150	205-11	680MMF, 500V DCW CAP. •	C58469-102	213	MIXER GRID COIL
AP.	CAP.	L72799-2	205-12	680MMF, 500V DCW CAP. •	C58469-102	214	DOUBLER PLATE
AP.	CAP.	L72799-2	205-13	680MMF, 500V DCW CAP. •	C58469-102	215-1	47MMF, 500V DCW
AP.	CAP.	L72799-2	205-14	680MMF, 500V DCW CAP. •	C58469-102	215-2	47MMF, 500V DCW
AP.	CAP.	L72799-2	205-15	680MMF, 500V DCW CAP. •	C58469-102	216	1.8 MEGOHMS ½W R
AP.	CAP.	L72799-2	205-16	680MMF, 500V DCW CAP. •	C58469-102	217	270,000 OHMS ½W R
V DCW CAP.	00V DCW CAP. •	C58469-102	205-17	680MMF, 500V DCW CAP. •	C58469-102	218	GANG CAP. (2 SEC
V DCW CAP.	00V DCW CAP. •	C58469-102	205-18	680MMF, 500V DCW CAP. •	C58469-102	219-1	4,700 OHMS ½W RES
V DCW CAP.	00V DCW CAP. •	C58469-102	206	100,000 OHMS, ½W RES.	A102975-104	219-2	4,700 OHMS ½W RES
V DCW CAP.	00V DCW CAP. •	C58469-102	207	560,000 OHMS, ½W RES.	A102975-564	220	56,000 OHMS ½W RE
V DCW CAP.	00V DCW CAP. •	C58469-102	208	330 OHMS, ½W RES.	A102975-331	221	560 OHMS ½W RES.
V DCW CAP.	00V DCW CAP. •	C58469-102	209	1,000 OHMS, ½W RES.	A102975-102	222	1,000 OHMS, ½W RE
V DCW CAP.	00V DCW CAP. •	C58469-102	210	1,800 OHMS, ½W RES.	A102975-182	223	1,000 OHMS, ½W RE
V DCW CAP.	00V DCW CAP. •	C58469-102	211-1	1,000 OHMS, ½W RES.	A102975-102	224	1,000 OHMS, ½W RE
V DCW CAP.	00V DCW CAP. •	C58469-102	211-2	1,000 OHMS, ½W RES.	A102975-102	225	1,000 OHMS, ½W RE
V DCW CAP.	00V DCW CAP. •	C58469-102	212	R.F. PLATE COIL	A105064	226	1,000 OHMS, ½W RE
V DCW CAP.	00V DCW CAP. •	C58469-102	213	MIXER GRID COIL	A105064	276-1	1,000 OHMS, ½W RE
V DCW CAP.	00V DCW CAP. •	C58469-102	214	DOUBLER PLATE	A105064	229-2	1,000 OHMS, ½W RE
V DCW CAP.	00V DCW CAP. •	C58469-102	215-1	47MMF, 500V DCW	A105064		
V DCW CAP.	00V DCW CAP. •	C58469-102	215-2	47MMF, 500V DCW	A105064		
V DCW CAP.	00V DCW CAP. •	C58469-102	216	1.8 MEGOHMS ½W R	A105064		
V DCW CAP.	00V DCW CAP. •	C58469-102	217	270,000 OHMS ½W R	A105064		
V DCW CAP.	00V DCW CAP. •	C58469-102	218	GANG CAP. (2 SEC	A105064		
V DCW CAP.	00V DCW CAP. •	C58469-102	219-1	4,700 OHMS ½W RES	A105064		
V DCW CAP.	00V DCW CAP. •	C58469-102	219-2	4,700 OHMS ½W RES	A105064		
V DCW CAP.	00V DCW CAP. •	C58469-102	220	56,000 OHMS ½W RE	A105064		
V DCW CAP.	00V DCW CAP. •	C58469-102	221	560 OHMS ½W RES.	A105064		
V DCW CAP.	00V DCW CAP. •	C58469-102	222	1,000 OHMS, ½W RE	A105064		
V DCW CAP.	00V DCW CAP. •	C58469-102	223	1,000 OHMS, ½W RE	A105064		
V DCW CAP.	00V DCW CAP. •	C58469-102	224	1,000 OHMS, ½W RE	A105064		
V DCW CAP.	00V DCW CAP. •	C58469-102	225	1,000 OHMS, ½W RE	A105064		
V DCW CAP.	00V DCW CAP. •	C58469-102	226	1,000 OHMS, ½W RE	A105064		
V DCW CAP.	00V DCW CAP. •	C58469-102	276-1	1,000 OHMS, ½W RE	A105064		
V DCW CAP.	00V DCW CAP. •	C58469-102	229-2	1,000 OHMS, ½W RE	A105064		

REF. NO.	DESCRIPTION	DWG. NO.
230-6	.0068MFD, 500V DCW CAP. **	A102967-8
230-7	.0068MFD, 500V DCW CAP. **	A102967-8
230-8	.0068MFD, 500V DCW CAP. **	A102967-8
230-9	.0068MFD, 500V DCW CAP. **	A102967-8
230-10	.0068MFD, 500V DCW CAP. **	A102967-8
230-11	.0068MFD, 500V DCW CAP. **	A102967-8
230-12	.0068MFD, 500V DCW CAP. **	A102967-8
230-13	.0068MFD, 500V DCW CAP. **	A102967-8
230-14	.0068MFD, 500V DCW CAP. **	A102967-8
230-15	.0068MFD, 500V DCW CAP. **	A102967-8
230-16	.0068MFD, 500V DCW CAP. **	A102967-8
230-17	.0068MFD, 500V DCW CAP. **	A102967-8
230-18	.0068MFD, 500V DCW CAP. **	A102967-8
230-19	.0068MFD, 500V DCW CAP. **	A102967-8
230-20	.0068MFD, 500V DCW CAP. **	A102967-8
230-21	.0068MFD, 500V DCW CAP. **	A102967-8
230-22	.0068MFD, 500V DCW CAP. **	A102967-8
230-23	.0068MFD, 500V DCW CAP. **	A102967-8
231	1ST I.F. ASSEM.	AL73530-1
232	2ND I.F. ASSEM.	AL73531-1
233	3RD I.F. ASSEM.	AL73026-4
234	4TH I.F. ASSEM.	AL73028-2
235-1	1,000 OHMS, ½W RES.	A18001-102
235-2	1,000 OHMS, ½W RES.	A18001-102
235-3	1,000 OHMS, ½W RES.	A18001-102
235-4	1,000 OHMS, ½W RES.	A18001-102
236-1	100,000 OHMS, ½W RES.	A18001-104
236-2	100,000 OHMS, ½W RES.	A18001-104
236-3	100,000 OHMS, ½W RES.	A18001-104
236-4	100,000 OHMS, ½W RES.	A18001-104
236-5	100,000 OHMS, ½W RES.	A18001-104
237-1	220 OHMS, ½W RES.	A18001-221
237-2	220 OHMS, ½W RES.	A18001-221
237-3	220 OHMS, ½W RES.	A18001-221
237-4	220 OHMS, ½W RES.	A18001-221
238-1	47,000 OHMS ½W RES.	A18001-473
238-2	47,000 OHMS ½W RES.	A18001-473
238-3	47,000 OHMS ½W RES.	A18001-473
238-4	47,000 OHMS ½W RES.	A18001-473
239-1	1.0 MFD, 100V DCW CAP.	A104484
239-2	1.0 MFD, 100V DCW CAP.	A104484
240	0-10 MILLAMMETER	A104194-4
241	300 OHMS, THES. CONTROL	A105022
242	3000 OHMS, GAIN CONTROL	C58961
243	SELECTOR SWITCH	C58583
244-1	1 MEGOHM, ½W RES.	A102975-105
244-2	1 MEGOHM, ½W RES.	A102975-105
245-1	330 MMF, 500V DCW CAP.	C58469-331
245-2	330 MMF, 500V DCW CAP.	C58469-331
246	1.8 MMF, 500V DCW CAP.	C56336-18
247	220 MMF, 500V DCW CAP.	C58469-221
248	0.1 MFD, 400V DCW CAP.	A18015-104
249	18,000 OHMS, ½W RES.	A18001-183
250	2,200 OHMS, ½W RES.	A18001-222
251	1 MEG, VOLUME CONTROL	A102616
252	68,000 OHMS, ½W RES.	A102975-683
253-1	33,000 OHMS, ½W RES.	A102975-333
253-2	33,000 OHMS, ½W RES.	A102975-333
254	ATTENUATOR SWITCH	C58584
255	330,000 OHMS, ½W RES.	A102975-334
256	560 OHMS, 2W RES.	RC41BE561J
257	.0068 MFD, 500V DCW CAP.	A25714-7
258	OUTPUT TRANS.	A103058
259	PRI. OUTPUT TRANS.	A103058
260	SEC. OUTPUT TRANS.	A103058
261	4700 OHMS, ½W RES.	A18001-472
262-1	PHONE JACK	A103533
262-2	PHONE JACK	A103533
263	JONES PLUG	A105106
264	4700 OHMS, ½W RES.	A18004-472
265	100 MMF, 500V DCW CAP.	C56317-101
266	C.W. OSC. PLATE COIL	AA106068
267	4.7 MMF, 500V DCW CAP.	C58469-47
268	47,000 OHMS, ½W RES.	A18004-473
269	C.W. OSC. GRID COIL	A105036-1
270	VARIABLE CAP.	A105041
271	390 MMF, 500V DCW CAP.	C56317-391
272	C.W. OSC. COIL ASSEM.	C58590-1
273	DIAL LIGHT ASSEM.	A104910
274	H.F. OSC. ASSEMBLY	AN91052-1
275	R.F. ASSEMBLY	AN91050-1
276-1	.001MFD, 500V DCW CAP.	C58469-102
276-2	.001MFD, 500V DCW CAP.	C58469-102
276-3	.001MFD, 500V DCW CAP.	C58469-102
276-4	.001MFD, 500V DCW CAP.	C58469-102
278-1	330 OHMS, 1W RES.	RC30BE331K
278-2	330 OHMS, 1W RES.	RC30BE331K
VT-103	DET., 1ST AUDIO, AVC	
VT-152	2ND AUDIO	
VT-202	H.F. OSC.	
VT-203	R.F. AMPLIFIER	
VT-203	MIXER	
VT-203	DOUBLER	
VT-211	1ST I.F.	
VT-211	2ND I.F.	
VT-211	3RD I.F.	
VT-211	C.W. OSC.	

DWG. NO.
C58495-600
C58495-600
C58495-600
AA104206-1
AA104206-1
AA104206-1
AA104206-1
AA104206-1
AA104206-1
AA104206-1
AA104206-1
AA104206-1
A102967-8
A102967-8
A102967-8
A102967-8
A102967-8

* ANY VALUE FROM 1000 MMF TO 600 MMF. IS ACCEPTABLE.

** ANY VALUE FROM .01MFD TO .006 MFD IS ACCEPTABLE.

Figure 22 – Radio Receiver BC-639-A, Schematic Diagram

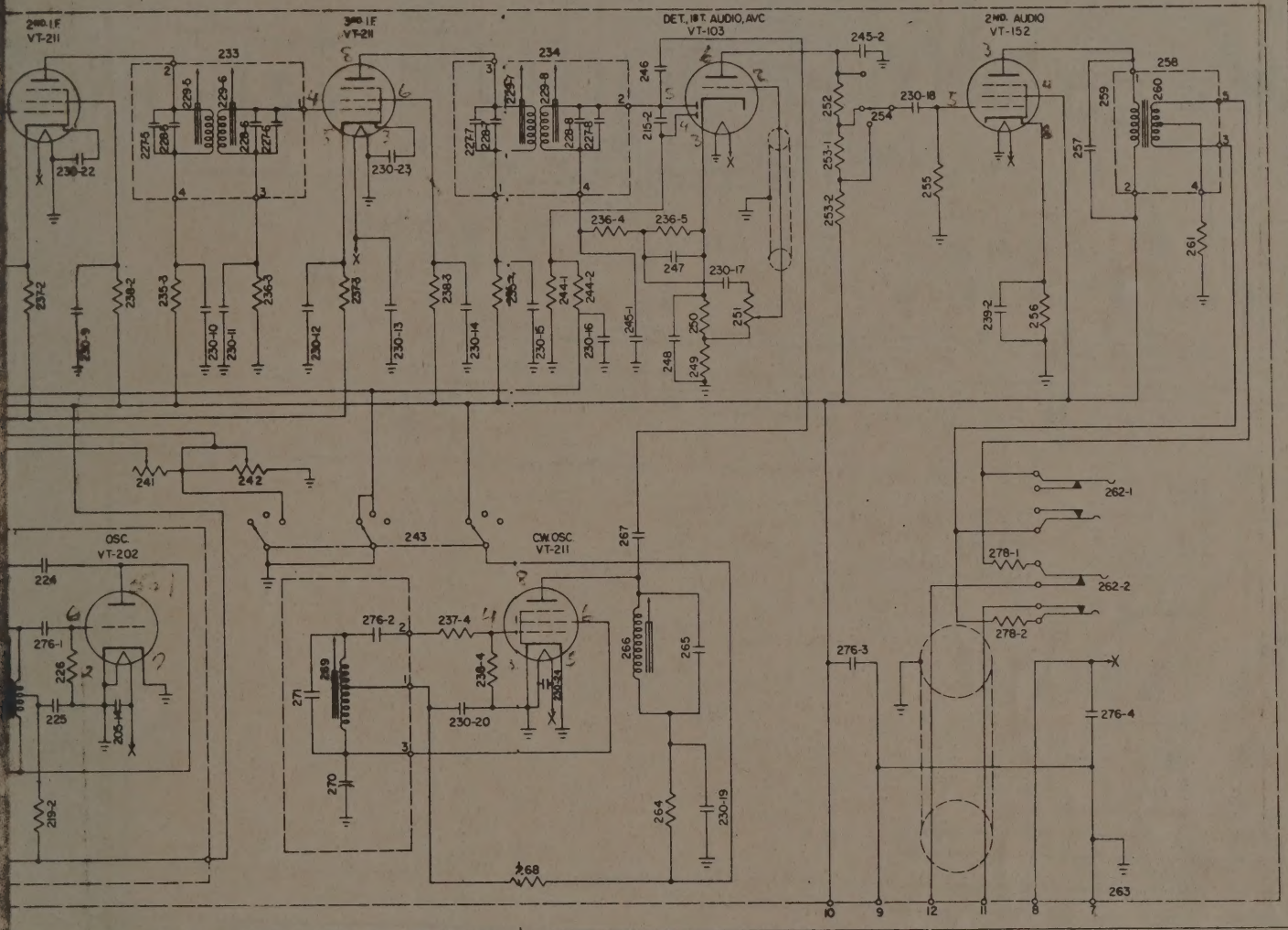

RIPTION	DWG. NO.
OHMS, ½W RES.	A102975-102
OHMS, ½W RES.	A102975-102
PLATE COIL	A105065
R GRID COIL	A105066
LER PLATE COIL	A104311
F, 500V DCW CAP.	C58469-470
F, 500V DCW CAP.	C58469-470
EGOHMS ½W RES.	A102975-185
00 OHMS ½W RES.	A102975-274
CAP. (2 SEC)	L72798-2
OHMS ½W RES.	A102975-472
OHMS ½W RES.	A102975-472
OHMS ½W RES.	A102975-563
HMS ½W RES.	A102975-561
OHMS ½W RES.	A102975-273
SC. COIL	A105061

REF. NO.	DESCRIPTION	DWG. NO.
224	27MMF, 500V DCW CAP.	C58469-270
225	150MMF, 500V DCW CAP.	C58469-151
226	47,000 OHMS ½W RES.	A102975-473
227-1	15MMF, 500V DCW CAP.	A25715-15
227-2	15MMF, 500V DCW CAP.	A25715-15
227-3	15MMF, 500V DCW CAP.	A25715-15
227-4	15MMF, 500V DCW CAP.	A25715-15
227-5	15MMF, 500V DCW CAP.	A25715-15
227-6	15MMF, 500V DCW CAP.	A25715-15
227-7	15MMF, 500V DCW CAP.	A25715-15
227-8	15MMF, 500V DCW CAP.	A25715-15
228-1	60MMF, 500V DCW CAP.	C58495-600
228-2	60MMF, 500V DCW CAP.	C58495-600
228-3	60MMF, 500V DCW CAP.	C58495-600
228-4	60MMF, 500V DCW CAP.	C58495-600
228-5	60MMF, 500V DCW CAP.	C58495-600

REF. NO.	DESCRIPTION	DWG. NO.
228-6	60MMF, 500V DCW CAP.	C58495-600
228-7	60MMF, 500V DCW CAP.	C58495-600
228-8	60MMF, 500V DCW CAP.	C58495-600
229-1	IF COIL	AA104206-1
229-2	IF COIL	AA104206-1
229-3	IF COIL	AA104206-1
229-4	IF COIL	AA104206-1
229-5	IF COIL	AA104206-1
229-6	IF COIL	AA104206-1
229-7	IF COIL	AA104206-1
229-8	IF COIL	AA104206-1
230-1	.0068MFD, 500V DCW CAP. ∞	A102967-8
230-2	.0068MFD, 500V DCW CAP. ∞	A102967-8
230-3	.0068MFD, 500V DCW CAP. ∞	A102967-8
230-4	.0068MFD, 500V DCW CAP. ∞	A102967-8
230-5	.0068MFD, 500V DCW CAP. ∞	A102967-8

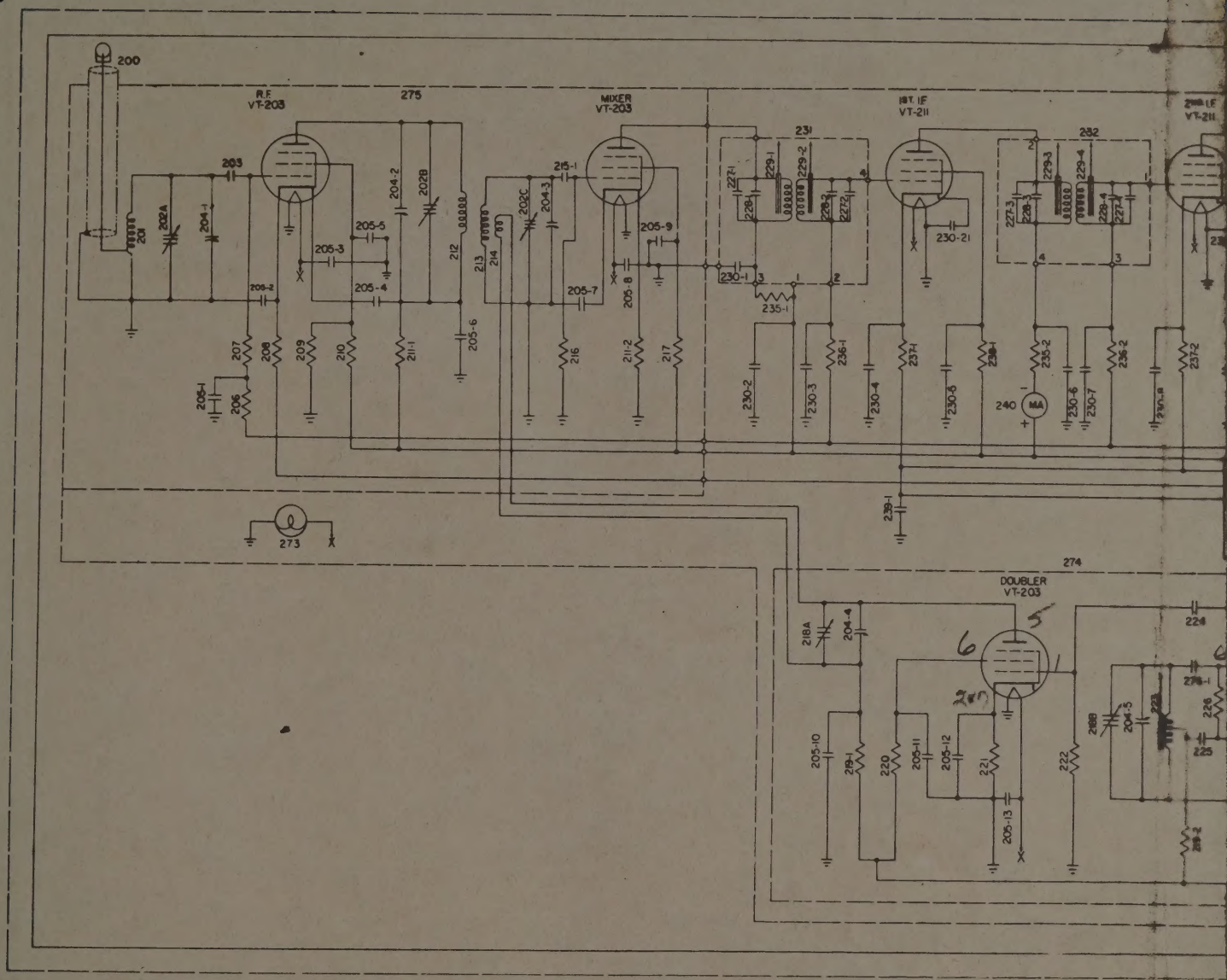

REF NO.	DESCRIPTION	DWG NO.
200	ANTENNA PLUG	C58585
201	ANTENNA COIL	A105064
202	GANG CAP (3 SEC)	L72799-2
203	15MMF, 500V DCW CAP.	C58469-150
204-1	TRIMMER CAP.	L72799-2
204-2	TRIMMER CAP.	L72799-2
204-3	TRIMMER CAP.	L72799-2
204-4	TRIMMER CAP.	L72799-2
204-5	TRIMMER CAP.	L72799-2
205-1	680MMF, 500V DCW CAP. •	C58469-102
205-2	680MMF, 500V DCW CAP. •	C58469-102
205-3	680MMF, 500V DCW CAP. •	C58469-102
205-4	680MMF, 500V DCW CAP. •	C58469-102
205-5	680MMF, 500V DCW CAP. •	C58469-102
205-6	680MMF, 500V DCW CAP. •	C58469-102
205-7	680MMF, 500V DCW CAP. •	C58469-102

REF. NO.	DESCRIPTION	DWG. NO.
205-8	680MMF, 500V DCW CAP. •	C58469-102
205-9	680MMF, 500V DCW CAP. •	C58469-102
205-10	680MMF, 500V DCW CAP. •	C58469-102
205-11	680MMF, 500V DCW CAP. •	C58469-102
205-12	680MMF, 500V DCW CAP. •	C58469-102
205-13	680MMF, 500V DCW CAP. •	C58469-102
205-14	680MMF, 500V DCW CAP. •	C58469-102
205-15	680MMF, 500V DCW CAP. •	C58469-102
205-16	680MMF, 500V DCW CAP. •	C58469-102
205-17	680MMF, 500V DCW CAP. •	C58469-102
205-18	680MMF, 500V DCW CAP. •	C58469-102
206	100,000 OHMS, ½W RES.	A102975-104
207	560,000 OHMS, ½W RES.	A102975-564
208	330 OHMS, ½W RES.	A102975-331
209	120,000 OHMS, ½W RES.	A102975-124
210	39,000 OHMS, ½W RES.	A18004-393

REF. NO.	DESCRIPTION
211-1	1,800 OHMS,
211-2	1,000 OHMS,
212	R.F. PLATE C
213	MIXER GRID C
214	DOUBLER PL
215-1	47MMF, 500V D
215-2	47MMF, 500V D
216	1.8 MEGOHMS
217	270,00 OHMS
218	GANG CAP. (2
219-1	4,700 OHMS ½W
219-2	4,700 OHMS ½W
220	56,00 OHMS ½
221	560 OHMS ½W
222	27,00 OHMS ½
223	H.F. OSC. COI

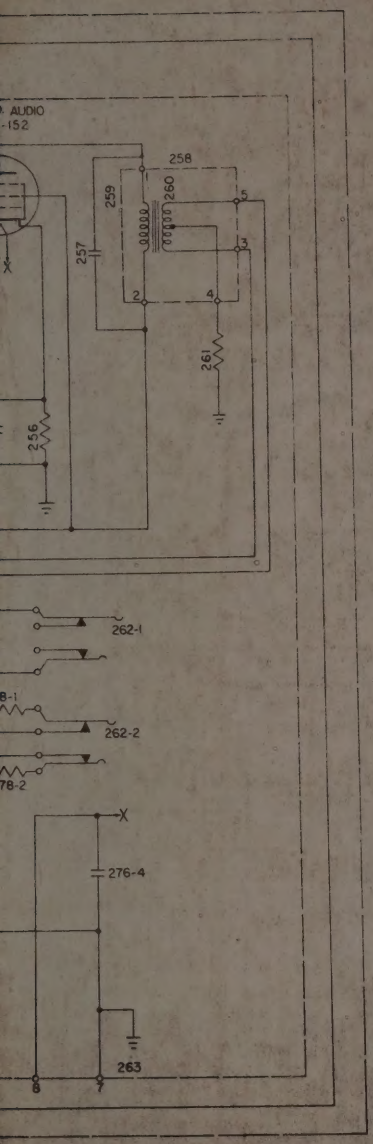

REF. NO.	DESCRIPTION	DWG. NO.
230-6	.0068MFD, 500V DCW CAP. **	A102967-8
230-7	.0068MFD, 500V DCW CAP. **	A102967-8
230-8	.0068MFD, 500V DCW CAP. **	A102967-8
230-9	.0068MFD, 500V DCW CAP. **	A102967-8
230-10	.0068MFD, 500V DCW CAP. **	A102967-8
230-11	.0068MFD, 500V DCW CAP. **	A102967-8
230-12	.0068MFD, 500V DCW CAP. **	A102967-8
230-13	.0068MFD, 500V DCW CAP. **	A102967-8
230-14	.0068MFD, 500V DCW CAP. **	A102967-8
230-15	.0068MFD, 500V DCW CAP. **	A102967-8
230-16	.0068MFD, 500V DCW CAP. **	A102967-8
230-17	.0068MFD, 500V DCW CAP. **	A102967-8
230-18	.0068MFD, 500V DCW CAP. **	A102967-8
230-19	.0068MFD, 500V DCW CAP. **	A102967-8
230-20	.0068MFD, 500V DCW CAP. **	A102967-8
230-21	.0068MFD, 500V DCW CAP. **	A102967-8
230-22	.0068MFD, 500V DCW CAP. **	A102967-8
230-23	.0068MFD, 500V DCW CAP. **	A102967-8
231	1ST I.F. ASSEM.	AL73530-1
232	2ND I.F. ASSEM.	AL73531-1
233	3RD I.F. ASSEM.	AL73026-4
234	4TH I.F. ASSEM.	AL73028-2
235-1	1,000 OHMS, ½W RES.	A18001-102
235-2	1,000 OHMS, ½W RES.	A18001-102
235-3	1,000 OHMS, ½W RES.	A18001-102
235-4	1,000 OHMS, ½W RES.	A18001-102
236-1	100,000 OHMS, ½W RES.	A18001-104
236-2	100,000 OHMS, ½W RES.	A18001-104
236-3	100,000 OHMS, ½W RES.	A18001-104
236-4	100,000 OHMS, ½W RES.	A18001-104
236-5	100,000 OHMS, ½W RES.	A18001-104
237-1	220 OHMS, ½W RES.	A18001-221
237-2	220 OHMS, ½W RES.	A18001-221
237-3	220 OHMS, ½W RES.	A18001-221
237-4	220 OHMS, ½W RES.	A18001-221
238-1	47,000 OHMS ½W RES.	A18001-473
238-2	47,000 OHMS ½W RES.	A18001-473
238-3	47,000 OHMS ½W RES.	A18001-473
238-4	47,000 OHMS ½W RES.	A18001-473
239-1	1.0 MFD, 100V DCW CAP.	A104484
239-2	1.0 MFD, 100V DCW CAP.	A104484
240	0-10 MILLAMMETER	A104194-4
241	300 OHMS, THES. CONTROL	A105022
242	3000 OHMS, GAIN CONTROL	C58961
243	SELECTOR SWITCH	C58583
244-1	1 MEGOHM, ½W RES.	A102975-105
244-2	1 MEGOHM, ½W RES.	A102975-105
245-1	330 MMF, 500V DCW CAP.	C58469-331
245-2	330 MMF, 500V DCW CAP.	C58469-331
246	1.8 MMF, 500V DCW CAP.	C56336-18

REF. NO.	DESCRIPTION	DWG. NO.
247	220 MMF, 500V DCW CAP.	C58469-221
248	0.1 MFD, 400V DCW CAP.	A18015-104
249	18,000 OHMS, ¼W RES.	A18001-183
250	2,200 OHMS, ¼W RES.	A18001-222
251	1 MEG, VOLUME CONTROL	A102616
252	68,000 OHMS, ½W RES.	A102975-683
253-1	33,000 OHMS, ½W RES.	A102975-333
253-2	33,000 OHMS, ½W RES.	A102975-333
254	ATTENUATOR SWITCH	C58584
255	330,000 OHMS, ½W RES.	A102975-334
256	560 OHMS, 2W RES.	RC41BE561J
257	.0068 MFD, 500V DCW CAP.	A25714-7
258	OUTPUT TRANS.	A103058
259	PRI. OUTPUT TRANS.	A103058
260	SEC. OUTPUT TRANS.	A103058
261	4700 OHMS, ½W RES.	A18001-472
262-1	PHONE JACK	A103533
262-2	PHONE JACK	A103533
263	JONES PLUG	A105106
264	4700 OHMS, ½W RES.	A18004-472
265	100 MMF, 500V DCW CAP.	C56317-101
266	C.W. OSC. PLATE COIL	AA106068
267	4.7 MMF, 500V DCW CAP.	C58469-47
268	47,000 OHMS, ½W RES.	A18004-473
269	C.W. OSC. GRID COIL	A105036-1
270	VARIABLE CAP.	A105041
271	390 MMF, 500V DCW CAP.	C56317-391
272	C.W. OSC. COIL ASSEM.	C58590-1
273	DIAL LIGHT ASSEM.	A104910
274	H.F. OSC. ASSEMBLY	AN91052-1
275	R.F. ASSEMBLY	AN91050-1
276-1	.001MFD, 500V DCW CAP.	C58469-102
276-2	.001MFD, 500V DCW CAP.	C58469-102
276-3	.001MFD, 500V DCW CAP.	C58469-102
276-4	.001MFD, 500V DCW CAP.	C58469-102
278-1	330 OHMS, 1W RES.	RC30BE331K
278-2	330 OHMS, 1W RES.	RC30BE331K
VT-103	DET., 1ST AUDIO, AVC	
VT-152	2ND AUDIO	
VT-202	H.F. OSC.	
VT-203	R.F. AMPLIFIER	
VT-203	MIXER	
VT-203	DOUBLER	
VT-211	1ST I.F.	
VT-211	2ND I.F.	
VT-211	3RD I.F.	
VT-211	C.W. OSC.	

DESCRIPTION	DWG. NO.
60MMF, 500V DCW CAP.	C58495-600
60MMF, 500V DCW CAP.	C58495-600
60MMF, 500V DCW CAP.	C58495-600
IF COIL	AA104206-1
IF COIL	AA104206-1
IF COIL	AA104206-1
IF COIL	AA104206-1
IF COIL	AA104206-1
IF COIL	AA104206-1
IF COIL	AA104206-1
IF COIL	AA104206-1
IF COIL	AA104206-1
.0068MFD, 500V DCW CAP. **	A102967-8
.0068MFD, 500V DCW CAP. **	A102967-8
.0068MFD, 500V DCW CAP. **	A102967-8
.0068MFD, 500V DCW CAP. **	A102967-8
.0068MFD, 500V DCW CAP. **	A102967-8

* ANY VALUE FROM 1000 MMF TO 600 MMF. IS ACCEPTABLE.

** ANY VALUE FROM .01MFD TO .006 MFD IS ACCEPTABLE.

Figure 22 – Radio Receiver BC-639-A, Schematic Diagram

PE-100-A are used, the receiver is connected directly to a switch panel so you can switch to either power supply. In installations where only Rectifier RA-42-A (or Rectifier RA-42-B) is used, the receiver is connected directly to the power supply. If only the Dynamotor Unit PE-100-A is used, a separate single-pole, single-throw switch, is located externally to both the receiver and to Dynamotor Unit PE-100-A. It turns the dynamotor unit on and off.

5. TABLE MOUNTED IN CASE CS-134, NAVY ADAPTATION.

There are two models of Radio Receiver BC-639-A. One of these (Table Mounted, Navy Adaptation) is used only by the U. S. Navy while the other is supplied to the U. S. Army. These receivers are the same as the rack mounted Radio Receiver BC-639-A except for the following differences:

a. Radio Receiver BC-639-A (Table Mounted, Navy Adaptation) is mounted in Case CS-134 supported on four Lord shockmounts. This case replaces the dust cover used in the rack mounted radio receiver. The mounting screw passes through a washer and sleeve in the shockmount.

b. Case CS-134 is equipped with eight sets of contact springs. Four sets at the bottom front of the case and four sets at the top front of the case. These contact springs are used to make electrical connections between the front edge of the case and the front panel of the receiver thus making the shielding of the receiver complete.

c. The receiver is held in the case by six knurled thumbscrews which are located three on each side of the case. These screws are not removable; they are held in slots in the case by "C" washers.

d. The flange supporting the outside antenna coupling and the hole in the case through which the coupling fits, have been enlarged so that the outside antenna coupling does not need to be removed from the chassis when removing the receiver from the case.

(1) The model supplied to the U. S. Army uses three screws in the case around the outside antenna coupling to make a firm contact.

(2) The model supplied to the U. S. Navy uses no screws in the case around the outside antenna coupling but has four sets of four grounding springs around the outside antenna coupling hole inside the case for good contact when the receiver is placed in the case.

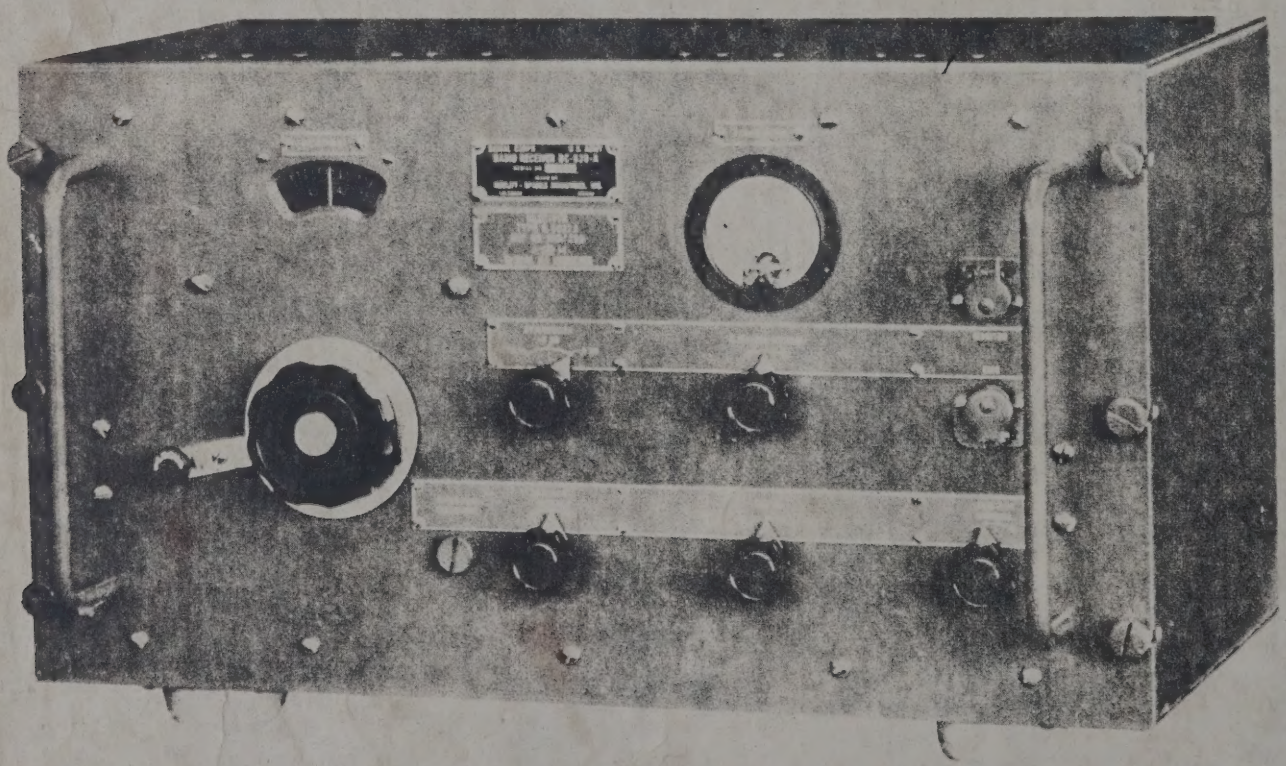

Figure 3 — Radio Receiver BC-639-A, (Navy Adaptation) Mounted in Case CS-134

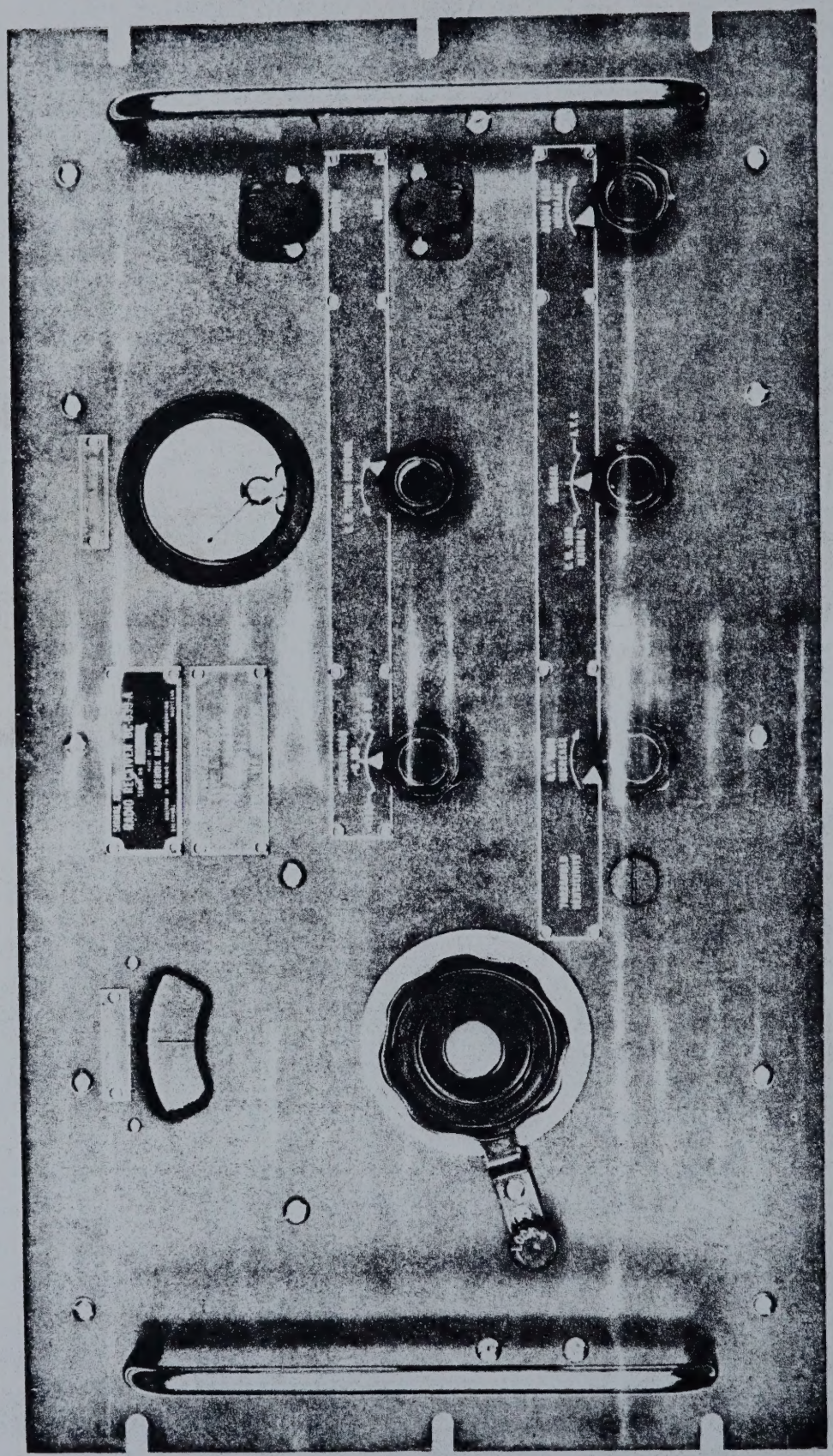

Figure 1 — Radio Receiver BC-639-A, Front View

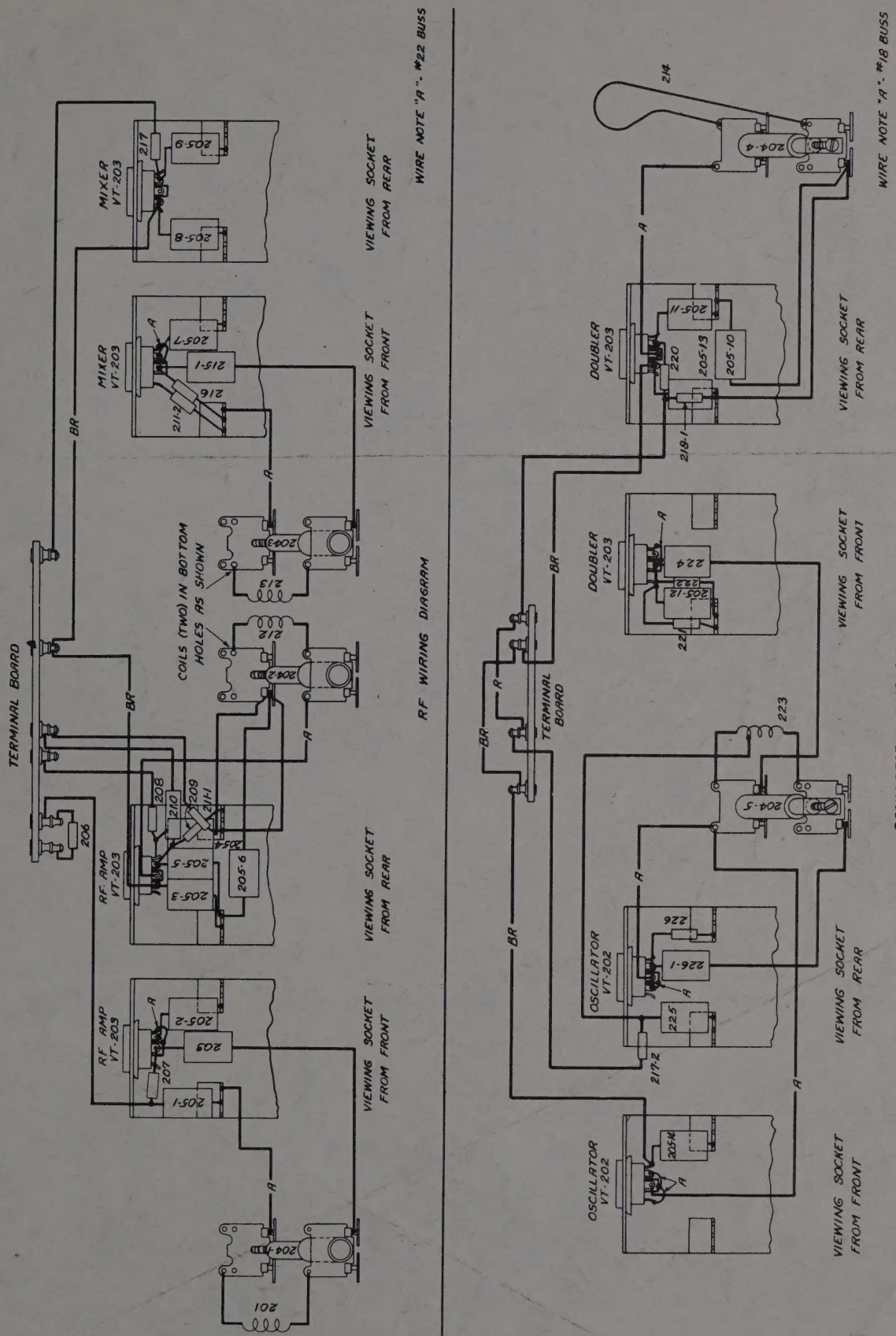

Figure 23 — Radio Receiver BC-639-A, R. F. and Oscillator Wiring Diagram

RESTRICTED

Classification Cancelled
Auth: CG. AMC
Date: 11 DEC '57
By: Jenny E. Albright
Capt Re SAF

AN 08-40BC687-2

HANDBOOK OF MAINTENANCE INSTRUCTIONS

FOR

RELAY UNIT BC-687-A

~~NOTICE: This document contains information affecting the national defense of the United States within the meaning of the Espionage Act, 50 U. S. C., 31 and 32, as amended. Its transmission or the revelation of its contents in any manner to an unauthorized person is prohibited by law.~~

RESTRICTED

Air Force-OAFB, Pa. 4527319-2M Rpt

Approved 13 MAY 1944

Published under joint authority of the United States War and Navy Departments and the Air Council of the United Kingdom.

SECURITY NOTICE

FOR U. S. PERSONNEL: This document contains information affecting the national defense of the United States within the meaning of the Espionage Act, 50 U.S.C., 31 and 32, as amended. Its transmission or the revelation of its contents in any manner to an unauthorized person is prohibited by law. (AR 380-5) (ARTS 75½ & 76, U.S.N. REGS-1920.)

The information contained in restricted documents and the essential characteristics of restricted material will not be communicated to the public or to the press, but may be given to any person known to be in the service of the United States and to persons of undoubted loyalty and discretion who are cooperating in Government work.

FOR BRITISH PERSONNEL: For Official Use Only—Not to be communicated to anyone outside His Majesty's Service. Not to be published. The information given in this document is not to be communicated, either directly or indirectly, to the press or to any person not holding an official position in His Majesty's Service.

LIST OF REVISED PAGES ISSUED

NOTE: A heavy black vertical line, to the left of the text on revised pages, indicates the extent of the revision. This line is omitted where more than 50 per cent of the page is revised.

This issue contains no revisions.

ADDITIONAL COPIES OF THIS PUBLICATION MAY BE OBTAINED AS FOLLOWS:

AAF ACTIVITIES.—Submit requisitions to the Commanding General, Fairfield Air Service Command, Patterson Field, Fairfield, Ohio, Attention: Publications Distribution Branch, in accordance with AAF Regulation No. 5-9. Also, for details of Technical Order distribution, see T. O. No. 00-25-3.

NAVY ACTIVITIES.—Submit requests to the Chief, Bureau of Aeronautics, Navy Department, Washington, D. C.

BRITISH ACTIVITIES.—Submit requirements on Form 294A, in duplicate, to the Air Publications and Forms Store, New College, Leadhall Lane, Harrogate, Yorkshire, England.

TABLE OF CONTENTS

Section		Page
	DESTRUCTION NOTICE	ii
	UNSATISFACTORY REPORT	ii
I.	GENERAL DESCRIPTION	
	1. General	1
	2. Equipment Supplied	1
	3. Description of Components	1
	a. General	1
	b. Vacuum Tubes	3
	4. Power Consumption	5
II.	INSTALLATION AND ADJUSTMENT	
	1. Installation	5
	a. Mounting and Fastening	5
	b. Wiring	5
	c. Vacuum Tube Insertion	7
	2. Adjustment	7
	a. Amplifier Gain Control	7
	b. Regulating The Rotary Switch Speed	7
III.	OPERATION	
	1. General	8
	2. Operation in Control Set (Operations Block)	8
	a. Use with Control Unit RM-28-A	8
	b. Use with Control Unit RM-25-A	8
	c. Use with Control Unit RM-26-A	9
	3. Operation in D/F Station	9
IV.	MECHANICAL AND ELECTRICAL CHARACTERISTICS	
	1. General	11
	2. Patch Circuits	11
	3. Controller Circuits	12
	4. Tie-In Circuits with Relay Station	12
	5. Power Supply	12
	6. Keying Mechanism	12
	7. Signaling Arrangement	13
	8. Amplifier	14
	9. Circuit Operation	14
	a. Preparation of Relay Unit BC-687-A for Operation	14
	b. Initial Operation with "SEND-RECEIVE" Switch in "SEND" Position	14
	c. Operation of Relay Unit BC-687-A when "SEND-RECEIVE" Switch is Changed to "RECEIVE" Position after Previous Operation in "SEND" Position	17
	d. Operation of Relay Unit BC-687-A when "SEND-RECEIVE" Switch is Changed to "SEND" Position after Previous Operation in "RECEIVE" Position	18
	e. Initial Operation with "SEND-RECEIVE" Switch in "RECEIVE" Position	18
	f. Disconnection at End of Call	19
	g. Operation of Speed Adjusting Key	20
V.	MAINTENANCE	
	1. Trouble Location and Remedy	20
	2. Operational Inspection	20
	3. Operational Tests	20
	4. Disassembling Unit	24
	5. Reassembling Unit	24
	6. Inspection and Overhaul	24
	7. Lubrication	24
	8. Location and Remedy of Faults	24
	9. Resistance Measurements	24
	a. Resistance Measurements to Tube Socket Terminals	24
	b. Resistance Measurements of Terminals	26
	c. Resistance Measurements to Rotary Switch Terminals	26
	10. Voltage Measurements to Socket Terminals	26
	11. Operating Analysis Check	27
	12. Normal Operating Tests	29
	a. Initial S Signal	29
	b. Subsequent S Signal, Following an R Signal on the Same Call	29
	13. Transmission Specifications	29
	a. Receiver Amplifier Gain	29
	b. Receiver Amplifier Frequency Response	29
	c. Oscillator Frequency	29
	d. Oscillator Output	29
	14. Replacing Defective Components	30
	a. General	30
	b. Resoldering Wires	30
	c. Vacuum Tube Replacement	30
	d. Pilot Bulb Replacement	30
	15. Relay Maintenance	30
	a. General	30
	b. Inspection	30
	16. Over-all Performance Tests	31
	a. General	31
	b. Test Equipment	31
	c. Test Procedures	31
VI.	TABLE OF REPLACEABLE PARTS	35
VII.	DRAWINGS	41

★

LIST OF ILLUSTRATIONS

Figure		Page
1.	Relay Unit BC-687-A, Inclosed in Dust Cover	1
2.	Relay Unit BC-687-A, Rear View	2
3.	Relay Unit BC-687-A, Front Panel	3
4.	Relay Unit BC-687-A, Top View	4
5.	Relay Unit BC-687-A, Outline Drawing	4
6.	Schematic Diagram Showing Forward Relay Connections, Control Unit RM-26-A, Through Control Unit RM-25-A, Relay Unit BC-687-A and Control Unit RM-28-A	6
7.	Block Diagram of Relay Unit with Control Units	8
8.	Relay Unit BC-687-A, Schematic Diagram	10
9.	Relay Unit BC-687-A, Bridge Circuit Schematic	11
10.	Relay Unit BC-687-A, Simplified Bridge Circuit Schematic	13
11.	Simplified Operational Schematic of Relay 815	13
12.	Relay Unit BC-687-A, Bottom View	21
13.	Rotary Switch 835 Contact Points on A, B, C, and D	22
14.	Wiring Diagram for Performance Test	22
15.	Test Equipment Set-Up No. 1	25
16.	Test Equipment Set-Up No. 2	25
17.	Two Relay Units BC-687-A, Test Set-Up	27
18.	Relay Unit BC-687-A, Circuit Diagram	43-44
19.	Relay Unit BC-687-A, Pictorial Wiring Diagram	45-46

DESTRUCTION OF ABANDONED MATERIEL IN THE COMBAT ZONE

In case it should become necessary to prevent the capture of this equipment and when ordered to do so, DESTROY IT SO THAT NO PART OF IT CAN BE SALVAGED, RECOGNIZED OR USED BY THE ENEMY. BURN ALL PAPERS AND BOOKS.

Means:—

1. Explosives, when provided.
2. Hammers, axes, sledges, machetes, or whatever heavy object is readily available.
3. Burning by means of incendiaries such as gasoline, oil, paper, or wood.
4. Grenades and shots from available arms.
5. Burying all debris or disposing of it in streams or other bodies of water, where possible and when time permits.

Procedure:—

1. Obliterate all identifying marks. Destroy nameplates and circuit labels.
2. Demolish all panels, castings, switch- and instrument-boards.
3. Destroy all controls, switches, relays, connections, and meters.
4. Rip out all wiring and cut interconnections of electrical equipment. Smash gas, oil and water-cooling systems in gas-engine generators, etc.
5. Smash every electrical or mechanical part, whether rotating, moving, or fixed.
6. Break up all operating instruments such as keys, phones, microphones, etc.
7. Destroy all classes of carrying cases, straps, containers, etc.
8. Bury or scatter all debris.

DESTROY EVERYTHING!

★

UNSATISFACTORY REPORT

For U. S. Army Air Force Personnel:—

In the event of malfunctioning, unsatisfactory design, or unsatisfactory installation of any of the component units of this equipment, or if the material contained in this book is considered inadequate or erroneous, an Unsatisfactory Report, AAF Form No. 54, or a report in similar form, shall be submitted in accordance with the provisions of Army Air Force Regulation No. 15-54 listing:

1. Station and organization.
2. Nameplate data (type number or complete nomenclature if nameplate is not attached to the equipment).
3. Date and nature of failure.
4. Radio model and serial number.
5. Remedy used or proposed to prevent recurrence.
6. Handbook errors or inadequacies, if applicable.

For U. S. Navy Personnel:—

Report of failure of any part of this equipment during its guaranteed life shall be made from N. Aer. 4112, "Report of Unsatisfactory or Defective Material," or a report in similar form, and forwarded in accordance with the latest instructions of the Bureau of Aeronautics. In addition to other distribution required, one copy shall be furnished to the Inspector of Naval Material (1600 Arch Street, Philadelphia 3, Pa.,) and the Bureau of Ships. Such reports of failure shall include:

1. Reporting activity.
2. Nameplate data.
3. Date placed in service.
4. Part which failed.
5. Nature and cause of failure.
6. Replacement needed (yes—no).
7. Remedy used or proposed to prevent recurrence.

For British Personnel:—

Form 1022 procedure should be used when reporting failure of radio equipment.

SECTION I
GENERAL DESCRIPTION

1. GENERAL.

This handbook describes the physical and operational characteristics of Relay Unit BC-687-A. In addition it contains complete information on installing and maintaining this equipment.

2. EQUIPMENT SUPPLIED.

Relay Unit BC-687-A is supplied with the control set in each VHF Fighter Control Net System SCS-2. Its overall dimensions are 19" x 8 23/32" x 12½," its total weight, 35 pounds.

3. DESCRIPTION OF COMPONENTS.

a. GENERAL.

(1) Relay Unit BC-687-A performs the following functions:

(*a*) Transmits necessary signals to the forward relay station for send-receive switching.

(*b*) Transmits necessary signals for channel identification.

(c) Serves as an amplifier for the signals received over the telephone line from the remote control center.

(2) The send-receive impulses consist of two tones sent simultaneously and keyed in International Morse Code letters, as follows:

Function	*Signal*
To send	••• (S)
To receive	•—• (R)

The impulses sent out are timed by an automatic rotary keyer switch. When the "SEND-RECEIVE" switch connected to Relay Unit BC-687-A is placed in the "SEND" position, the rotary switch automatically keys three dots forming the Morse *S*. When this switch is placed in the "RECEIVE" position, the rotary switch keys dot-dash-dot to form the Morse *R*. The channel impulses are a succession of dots as follows:

Function	*Signal*	
Channel 1	••	(2 dots)
Channel 2	•••	(3 dots)
Channel 3	••••	(4 dots)
Channel 4	•••••	(5 dots)

(3) A channel selection switch ("CODE SELECTOR") is provided on Relay Unit BC-687-A. When a sequence of operations is begun, an auto-

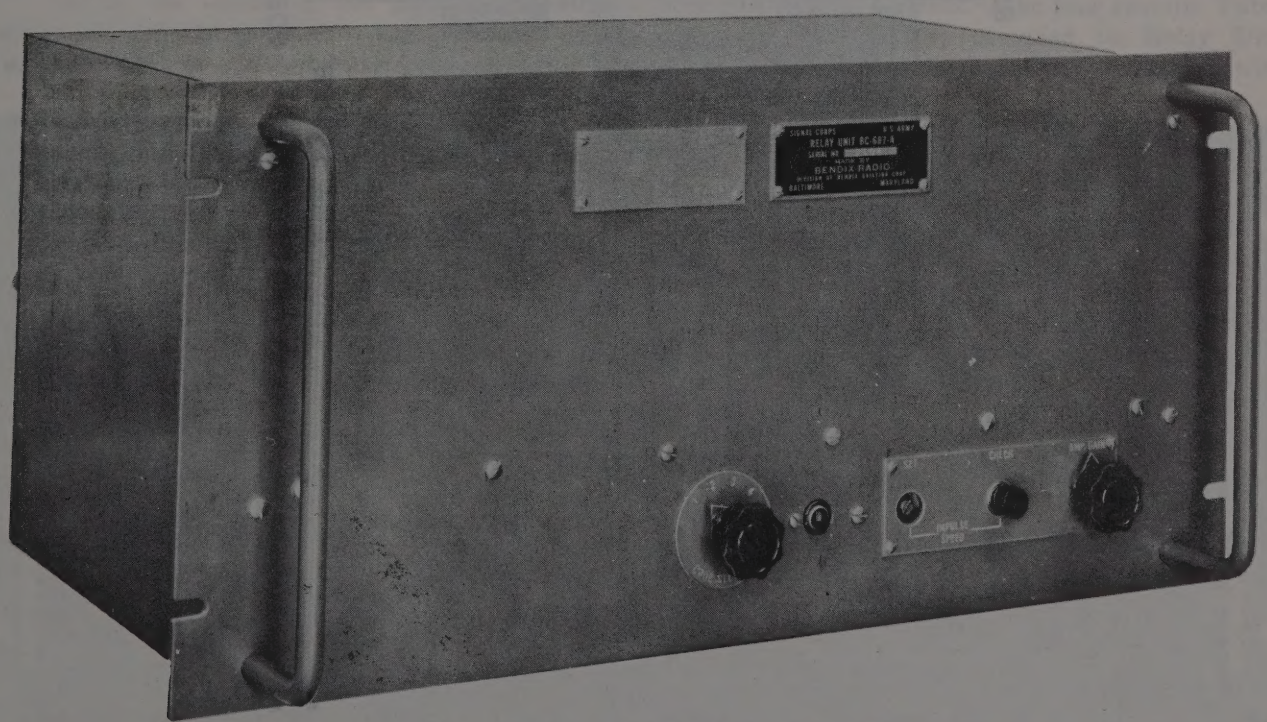

Figure 1 — Relay Unit BC-687-A, Inclosed in Dust Cover

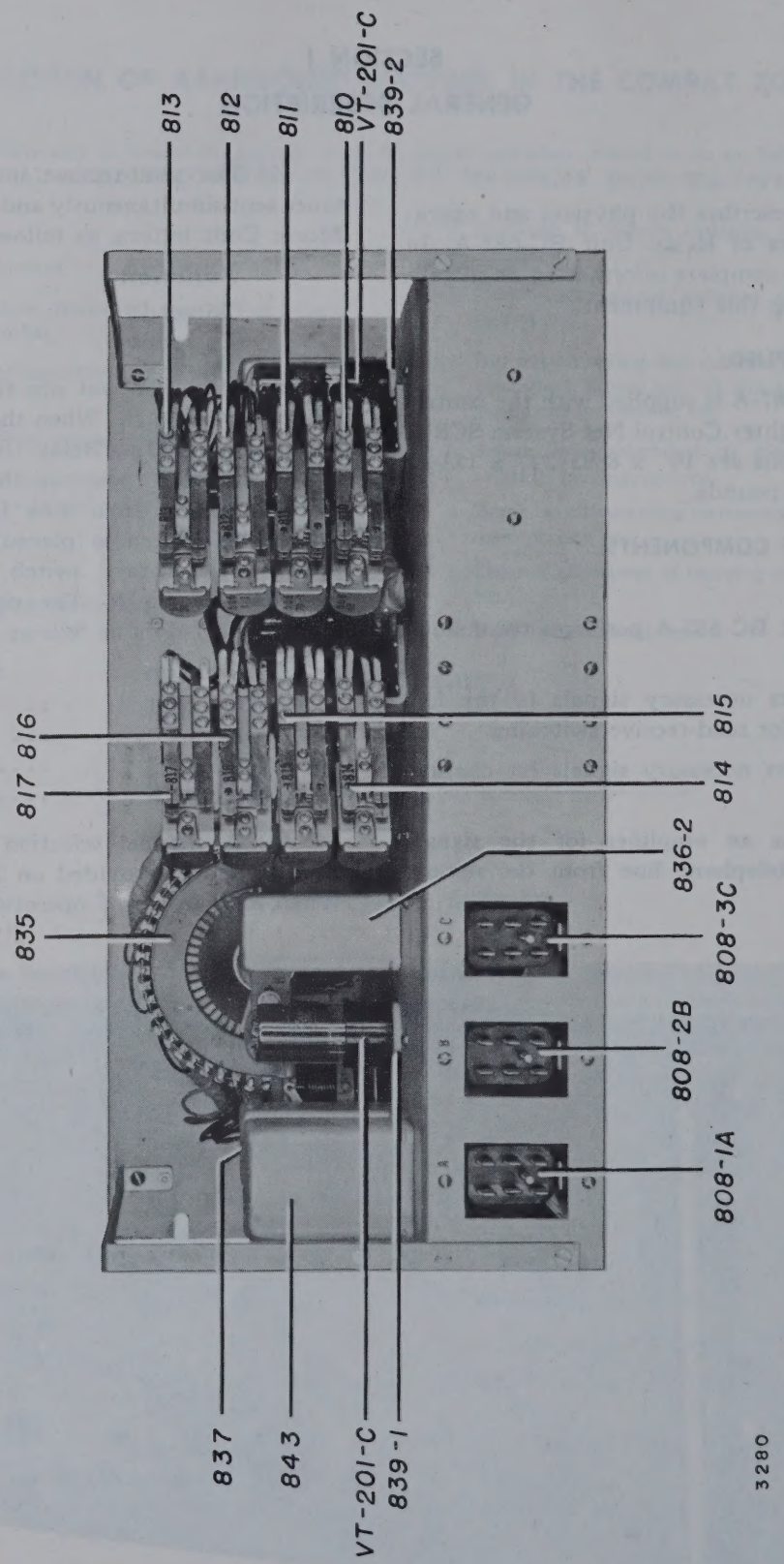

Figure 2 — Relay Unit BC-687-A, Rear View

matic switch keys the correct number of dots for the channel to which the "CODE SELECTOR" switch is set following the first send or receive signal. One dot more than the number of the channel is transmitted.

(4) Relay Unit BC-687-A also includes an audio frequency amplifier which provides approximately a 30 db amplification of signals coming into the unit over the telephone line. When transmitting, the gain of the amplifier is automatically decreased to prevent excessive sidetone.

(5) All of the connections to the unit are made to three plugs in the rear as shown in fig. 2. The four controls and a pilot light are mounted on the front panel. This equipment is normally located in an upright frame in the control set (operations block) or D/F (direction finding) station. One unit is used for each channel.

(6) Relay Unit BC-687-A is of standard panel and chassis construction. Its rear and sides are inclosed in a dust cover. (See fig. 1.) This cover has three rectangular holes in the rear lower left hand corner. (See fig. 2.) These holes provide access to the three Jones sockets A, B, and C mounted on the rear of the chassis. All connections to Relay Unit BC-687-A are made to these sockets by Jones plugs. As can be seen in figure 3 the following controls and indicator are located along the bottom of the front panel.

(*a*) In the center of the panel is a four-position "CODE SELECTOR" switch. The position in which this switch is placed determines the channel identification signal transmitted to the forward relay station. However, this switch does not actually determine the channel over which the unit will operate.

(*b*) To the right is the light used for checking the impulse speed of rotary switch 835. See figure 3. The light indicates each time the rotary on the switch makes one complete revolution. For correct operation the light should flash 50 times per minute.

(*c*) The next control on the panel is the "IMPULSE SPEED" regulator marked "SET." When the light does not flash the proper number of times per minute, the speed can be adjusted by this control. The "SET" adjustment actually controls the speed of the keyer and provides for speed adjustment.

(*d*) The other "IMPULSE SPEED" control marked "CHECK" is a pushbutton which puts the indicator light and keyer into action. This pushbutton must be pushed before attempting to check the impulse speed by light flashes and must be pushed each time this check is repeated. This button starts the keyer but does not affect the speed of the light flashes or the movement of the rotary switch.

(*e*) The last control on the panel is the "AMP. GAIN" control; it is used to regulate the volume of the incoming signals from the remote station. These signals are amplified by a single stage vacuum tube amplifier in the relay unit.

b. VACUUM TUBES.—The four vacuum Tubes VT-201-C (see fig. 4) provided in Relay Unit BC-687-A are high-gain, beam power tetrodes with

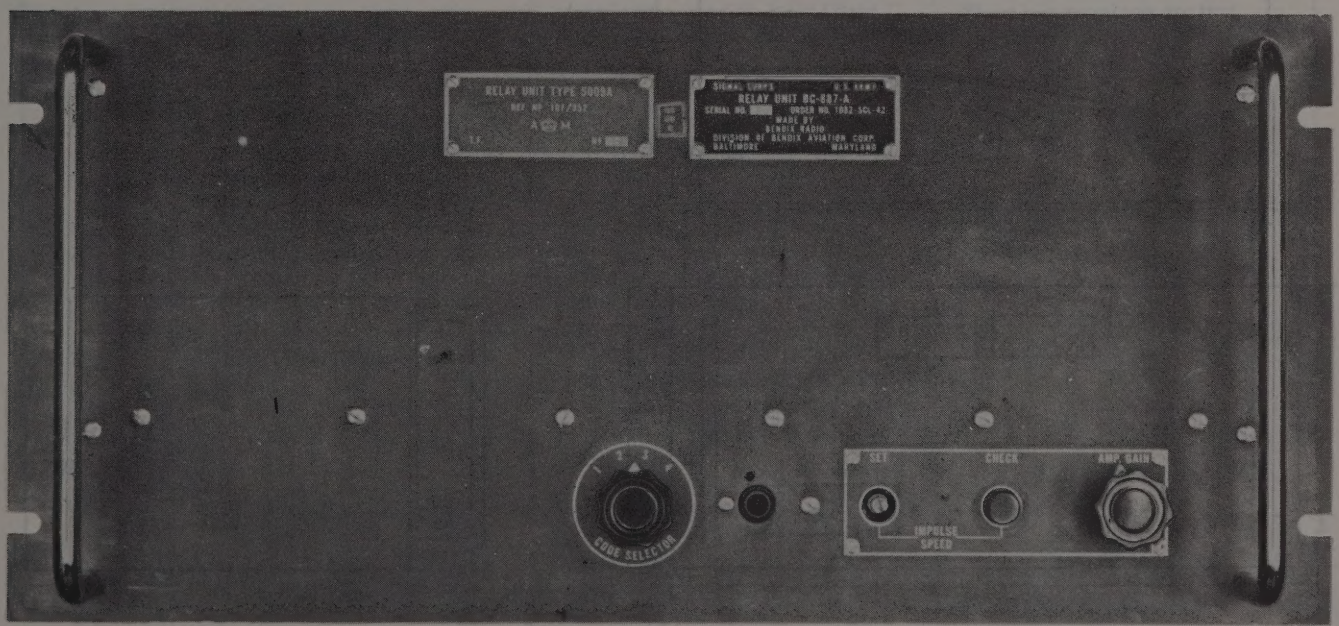

Figure 3 — Relay Unit BC-687-A, Front Panel

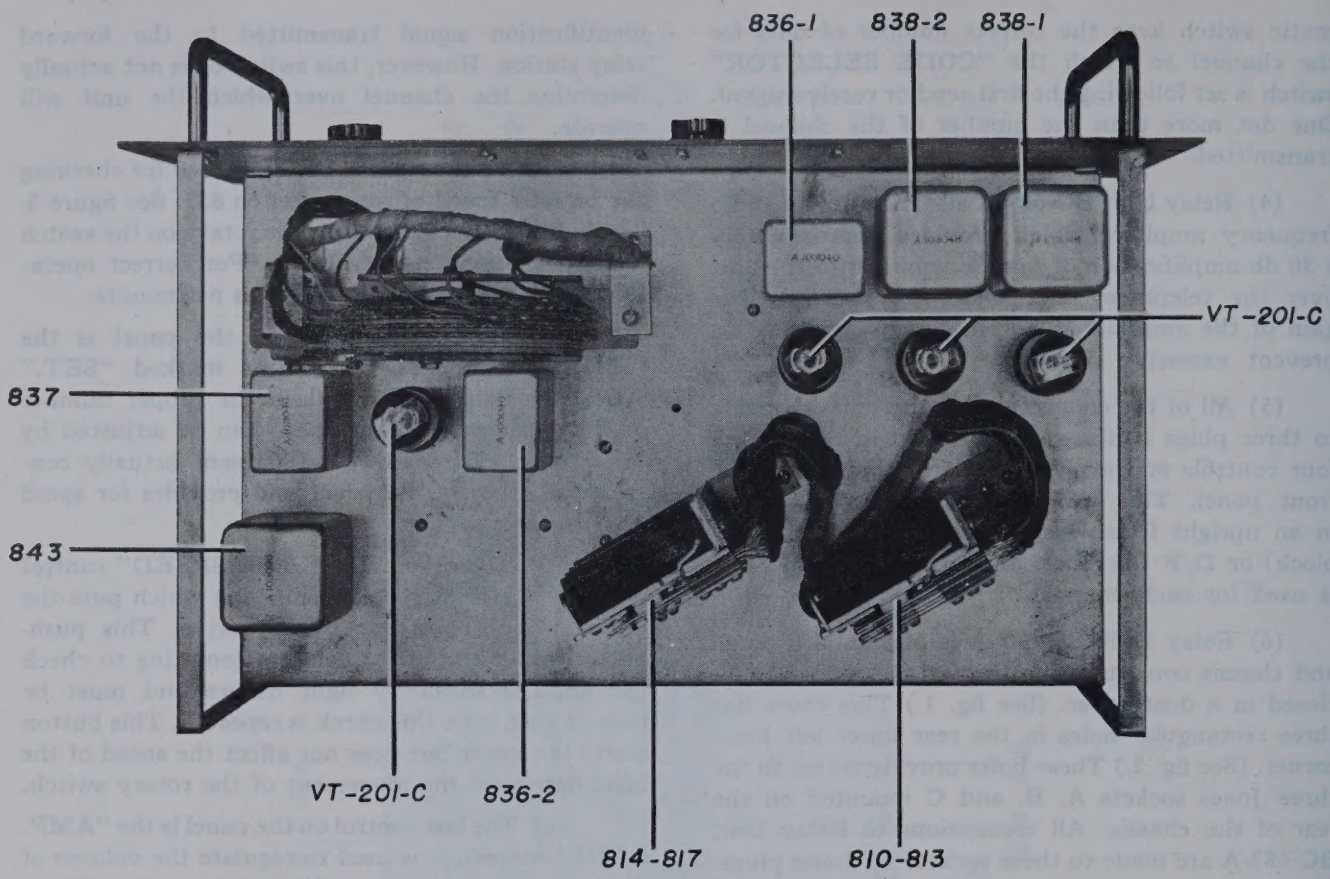

Figure 4 — Relay Unit BC-687-A, Top View

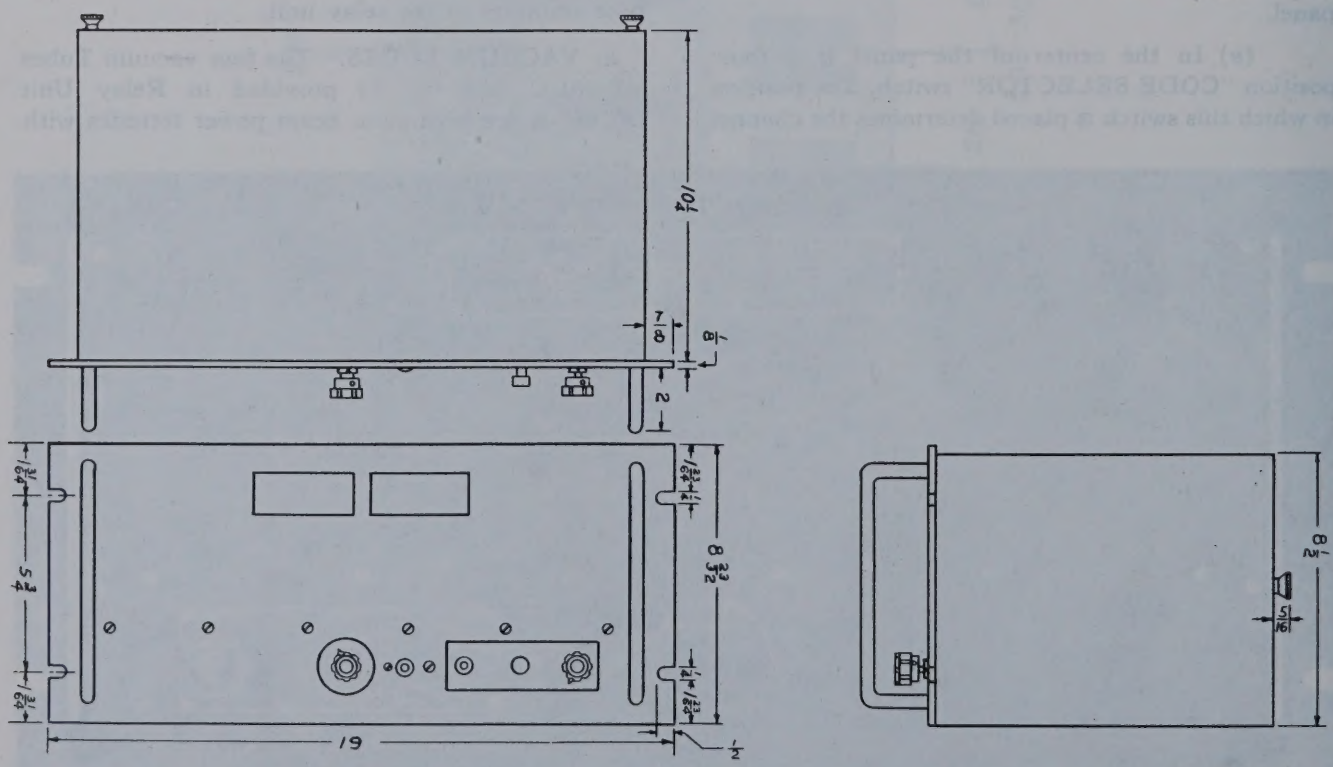

Figure 5 — Relay Unit BC-687-A, Outline Drawing

25-volt heaters. The circuit for each tube in the relay unit is such that the tubes operate satisfactorily from a 24-volt direct current source which provides both heater and plate current. The four vacuum tubes are used as follows:

(1) One tube to generate 450 cycles.

(2) One tube to generate 700 cycles.

(3) One common amplifier to amplify both audio frequencies.

(4) One speech amplifier to amplify incoming voice signals.

4. POWER CONSUMPTION.

The power consumed by Relay Unit BC-687-A during normal operations is approximately 2.2 amperes at 24 volts d. c. during keying operations. This drops to 1.2 amperes when the keyer is not operating. All power to operate Relay Unit BC-687-A is normally obtained from two 12-volt storage batteries connected in series.

★

SECTION II
INSTALLATION AND ADJUSTMENT

1. INSTALLATION.

a. MOUNTING AND FASTENING.—Relay Unit BC-687-A is usually mounted on Frame FM-39-A but may be mounted on any standard vertical mounting rack. Fasten the unit to the rack with four 10-32 fillister head screws, for which the rack is tapped. Two slots are provided on each side of the front panel of the unit for this purpose. See figure 5. Place a lock washer next to the head of the screw and the flat washer next to the panel. Do not connect the equipment until after fastening it securely in place.

b. WIRING.—All of the connections to Relay Unit BC-687-A are made to the three sockets marked A, B, and C on the rear of the chassis. Three plugs are provided for connection with the sockets. The plugs are wired to the units as listed in the chart below and as shown in figure 6.

Plug Connections on Relay Unit BC-687-A	*Circuit*	*Unit Connected to in Control Set**	*Unit Connected to in D/F Station**
A-7 A-8	"ON-OFF" switch for all circuits in relay unit.	Control Unit RM-25-A "CABIN ALLOCATION" and "CONTROLLER ALLOCATION" keys.	These two terminals are tied together.
A-9	"RELAY AVAILABLE" signal lamp voltage output. May be used as *S* and *R* signal control if A-10 not used.	"RELAY AVAILABLE" lamps in Control Unit RM-25-A and Control Unit RM-26-A.	"SEND-RECEIVE" key on Control Unit RM-18-A.
A-10	Signal lamp control relay.	−24v d-c through Control Unit RM-28-A and 50-ohm resistor in Fuse Panel PN-2-A.	Not used.
A-11 A-12	Channel signal control in relay unit.	"CABIN ALLOCATION" and "CONTROLLER ALLOCATION" on Control Unit RM-25-A and to "RADIO" pushbutton on Control Unit RM-26-A.	24v d-c supply
B-7	*S* and *R* signal control.	"SEND-RECEIVE" key on Control Unit RM-25-A and Control Unit RM-26-A.	−24v d-c
B-8	Not used.	Not used.	Used as tie point for +24v.

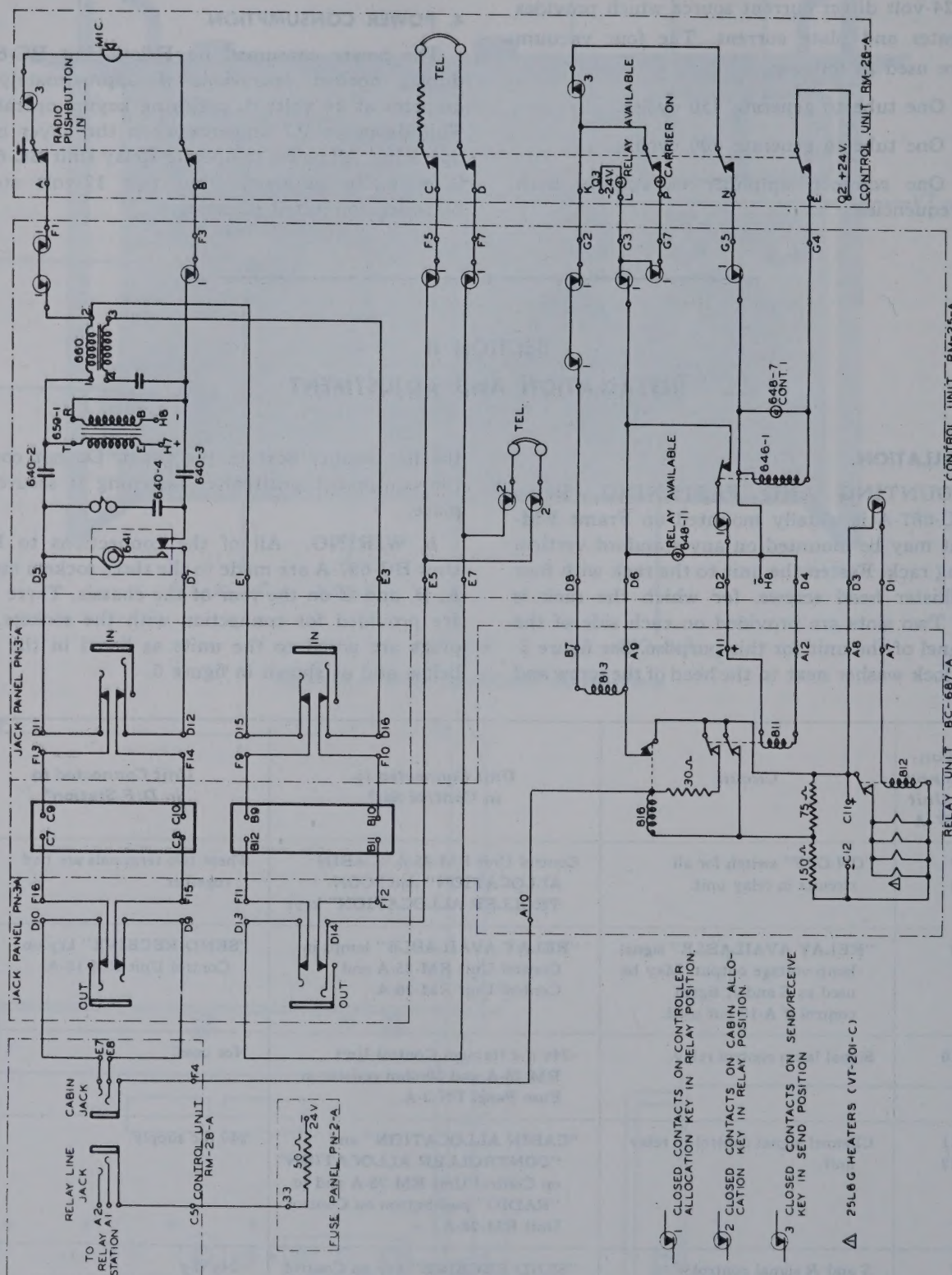

Figure 6 — Schematic Diagram Showing Forward Relay Connections, Control Unit RM-26-A, Through Control Unit RM-25-A, Relay Unit BC-687-A and Control Unit RM-28-A

Plug Connections on Relay Unit BC-687-A	*Circuit*	*Unit Connected to in Control Set**	*Unit Connected to in D/F Station**
B-9 B-10	Input to amplifier in relay unit.	Telephone line to remote station through Control Unit RM-25-A, and Control Unit RM-28-A.	Connects to C-9 and C-10 and to Control Unit RM-18-A transmitter line circuit.
B-11 B-12	Output of amplifier in relay unit.	Telephone headset circuit in Control Units RM-25-A and RM-26-A.	Telephone headset circuit in Control Unit RM-18-A.
C-7 C-8	Output of keying circuit in relay unit.	Telephone line to remote station through Control Unit RM-28-A.	Telephone line to remote station through Control Panel PN-25-A.
C-9 C-10	Input to keying circuit in relay unit.	Telephone line circuit in Control Unit RM-25-A.	Connects to B-9 and B-10 and to Control Unit RM-18-A transmitter line circuit.
C-11	Power input to relay unit.	+24v d-c	+24v d-c
C-12		-24v d-c	-24v d-c

*The connections may not be direct to these units but may be connected through some other unit such as Frame FM-40-A, Jack Panel PN-3-A, Fuse Panel PN-2-A, Fuse Panel PN-5-A, or Fuse Panel PN-15-A.

c. VACUUM TUBE INSERTION.

(1) Pull out the three Jones plugs in the rear of the chassis.

(2) Remove the two thumbscrews holding the dust cover. Remove the dust cover.

(3) Insert the vacuum tubes. Each is a Tube VT-201-C, so that no error is possible.

(4) Replace the dust cover and tighten the thumbscrews by hand.

(5) Replace the Jones plugs in their respective sockets. The plugs are marked A, B, and C to correspond with the sockets.

2. ADJUSTMENT.

Relay Unit BC-687-A has no power switch of its own. Power to it must be turned on by means of a switch located on Fuse Panel PN-2-A. After the unit has been properly mounted, its plugs inserted in their respective sockets, and the power supplied, it is then ready for adjustment. The following two operations are the only adjustments necessary for satisfactory operation of the unit. Little or no adjustment is required after the equipment is put in operation.

a. AMPLIFIER GAIN CONTROL.—This control regulates the volume of the signals received over the telephone line from the forward relay station. To increase the volume of these signals, rotate the control clockwise. To decrease them, rotate the control counterclockwise. Once this adjustment has been made there should be no need to readjust it during the course of operations, unless the telephone line or the remote radio receiver gain control is changed. Do not distort the signals with too much gain.

b. REGULATING THE ROTARY SWITCH SPEED.—Always check the speed of the keyer before putting the unit into operation by pushing the "IMPULSE SPEED-CHECK" pushbutton and counting the number of flashes per minute made by the indicator lamp. If this lamp flashes 50 times per minute, the rotary switch is operating properly. If the number of flashes exceeds 50, adjust by inserting a screwdriver in the slot of the "SET-IMPULSE-SPEED" control and rotating it counterclockwise. Push the pushbutton again and check the speed. If the light now flashes less than 50 times per minute, insert the screwdriver in the slot again and rotate the control clockwise. Follow this procedure until the light flashes exactly 50 times per minute.

SECTION III
OPERATION

1. GENERAL.

Three major functions are performed by Relay Unit BC-687-A. Two are controlled by other units. The third is the functioning of the single stage amplifier, which is used to increase the gain of the signals from the remote station to an audible level. The actual operation of Relay Unit BC-687-A requires only the use of the key switches located on the control units. Following are the functions of the unit.

2. OPERATION IN CONTROL SET (OPERATIONS BLOCK).

a. USE WITH CONTROL UNIT RM-28-A.—Control Unit RM-28-A is the unit through which the single-channel, two-wire telephone lines from the relay stations are connected to the operators who use these lines to operate the remote radio stations. From one to ten telephone lines may be provided through Control Unit RM-28-A. The lines are made available as follows (see fig. 7):

(1) The Signal Officer located at Control Unit RM-28-A connects a Patch Cord CC-70 from the "RELAY LINES" jack of the station desired to that "CABIN" jack to which it is to be connected.

(2) This operates a relay in the Relay Unit BC-687-A which turns on a green "RELAY AVAILABLE" signal light at Control Unit RM-25-A.

Note

If two Control Unit RM-25-A (silence cabin) operators should request use of the same relay station, the station may be made available to both, since two "RELAY LINES" jacks are provided for each line. If two Control Unit RM-25-A operators are patched into the same relay line, the "RELAY AVAILABLE" signal lights at both control units will glow until either of the operators begins to operate the relay station, at which time the signal light at the other control unit will go out. This indicates the station is no longer available to him. This operation is controlled by Relay Units BC-687-A, which automatically interlock and prevent one Control Unit RM-25-A operator from interfering with the second Control Unit RM-25-A operator when he is using the line. As long as the first Control Unit RM-25-A operator is using the telephone line, the second Control Unit RM-25-A operator cannot break in on the line with a signal until after the first Control Unit RM-25-A operator has completed his call.

b. USE WITH CONTROL UNIT RM-25-A.—By patching a relay station telephone line to Control

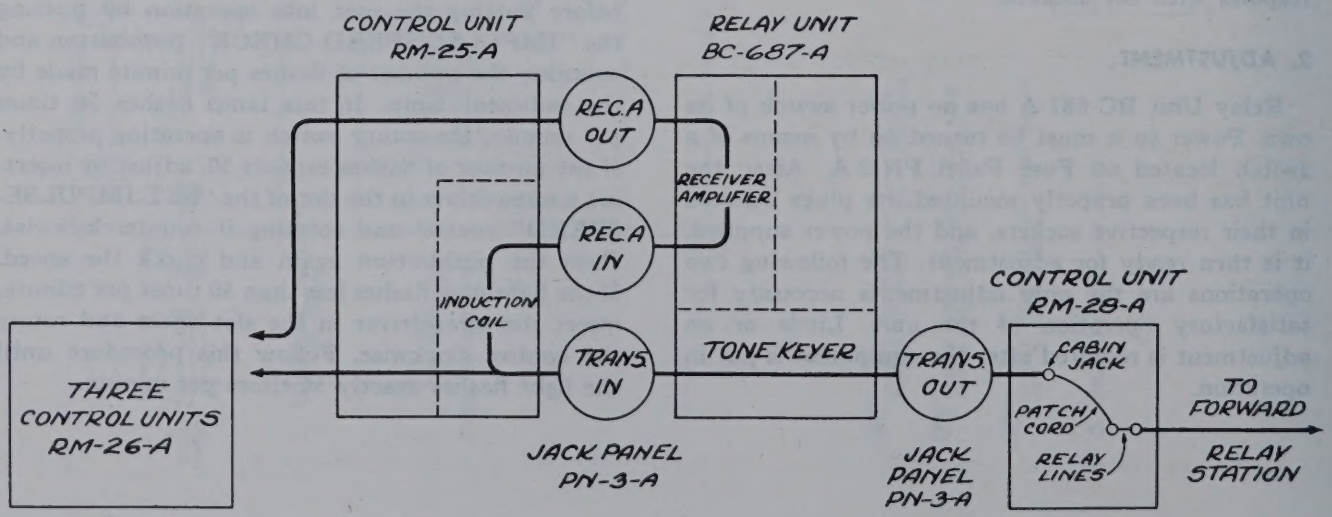

BLOCK DIAGRAM SHOWING PATH OF FORWARD RELAY CIRCUIT AT OPERATIONS BLOCK END OF RELAY LINE

Unit RM-25-A through Control Unit RM-28-A, it is possible to operate the relay station by means of switches on Control Unit RM-25-A. Proceed as follows:

(1) The "RELAY AVAILABLE" lamp on Control Unit RM-25-A must be glowing, indicating that no other operator is using the station desired.

(2) Switch the "CABIN ALLOCATION" key to the "RELAY" position. This operates a relay in Relay Unit BC-687-A which turns on the heaters of the tubes. When the tubes are warm and the time delay relay operates, the relay unit will send an *S* or *R*, depending upon the position of the "SEND-RECEIVE" key on the control unit. Immediately following the first *S* or *R* the channel signal will be transmitted.

(3) To use the *transmitter* at the remote station, place the "SEND-RECEIVE" key in the "SEND" position. To use the *receiver* at the remote station, place the key in the "RECEIVE" position. Relay Unit BC-687-A will automatically transmit the proper function over the telephone line, *S* when the "SEND-RECEIVE" switch is placed in the "SEND" position and *R* when the switch is placed in the "RECEIVE" position. The operator at the relay radio station will interpret the *S* and *R* signals into switching operations to switch the station from send to receive. Relay Unit BC-687-A will also automatically send the correct channel signal so that the remote station operator can switch the line to the proper frequency channel.

c. USE WITH CONTROL UNIT RM-26-A.—Whenever a relay radio station has been made available to a Control Unit RM-25-A, it may be allocated to the squadron controller located at a Control Unit RM-26-A and operated as follows:

(1) One of the "RELAY STA. ON" indicator lamps at Control Unit RM-26-A must be glowing, indicating that the station is available to the squadron controller.

(2) The squadron controller presses the "RADIO" pushbutton on the same channel as that indicated by the lamp glowing, that is, the pushbutton in the same vertical row as the indicator lamp. The relay unit is already turned on by operation of the "CONTROLLER ALLOCATION" key on Control Unit RM-25-A. When the controller at Control Unit RM-26-A presses the "RADIO" pushbutton, the relay unit will transmit an *S* or *R* signal, depending upon the position of the "SEND-RECEIVE" key, followed by the channel signal. The button will lock down until the "RELEASE" button or another "RADIO" button is depressed. While the "RADIO" button is depressed, a light on Control Unit RM-25-A will glow, indicating to the silence cabin operator that the squadron controller is using or desires to use the relay station.

(3) The squadron controller then places the "SEND-RECEIVE" key on Control Unit RM-26-A to "SEND" in order to use the transmitter at the remote station and to "RECEIVE" in order to use the receiver at the remote station. Relay Unit BC-687-A will automatically transmit the proper functions over the telephone line, *S* when the "SEND-RECEIVE" switch is placed in the "SEND" position and *R* when the switch is placed in the "RECEIVE" position. These signals are then picked up by the forward relay station operator, who adjusts his equipment accordingly. Relay Unit BC-687-A will also automatically send the correct channel signal so that the operator can switch the line to the proper frequency channel.

3. OPERATION IN D F STATION.

There are times when the D/F station controls a remote radio transmitter, or a remote radio transmitter and radio receiver over a two-wire telephone line. Relay Unit BC-687-A is used to transmit the send-receive and channel switching signals over the line.

a. When the D/F station uses its own radio transmitter and radio receiver, the relay unit is not used, and all power to the unit is turned off by means of a "RELAY UNIT" switch on Control Panel PN-25-A.

b. When a remote radio transmitter only is used, the "RELAY UNIT" switch on Control Panel PN-25-A is turned "ON" and the control key is placed in the "REMOTE TRANS.-LOCAL REC." position. This will turn on the tube heaters in the relay unit. As soon as the time delay relay operates, the unit will transmit an *R* or *S* on the line according to the position of the "SEND-RECEIVE" key on Control Unit RM-18-A, and will be followed by a channel signal. The operation of the "SEND-RECEIVE" key on Control Unit RM-18-A to "RECEIVE" will complete the headset circuit to the local radio receiver. An *R* signal will transmit, but a remote radio receiver will not be heard.

c. When both a remote radio receiver and remote radio transmitter are to be used by the D F station, the control key on Control Panel PN-25-A will be placed in the "REMOTE TRANS.-REMOTE REC." position. The relay unit operates the same as for use of a remote radio transmitter and local radio receiver. However when the "SEND-RECEIVE" key on Control Unit RM-18-A is placed at "RECEIVE", the headset circuit will be completed to the output of the amplifier in Relay Unit BC-687-A and the remote radio receiver will be heard.

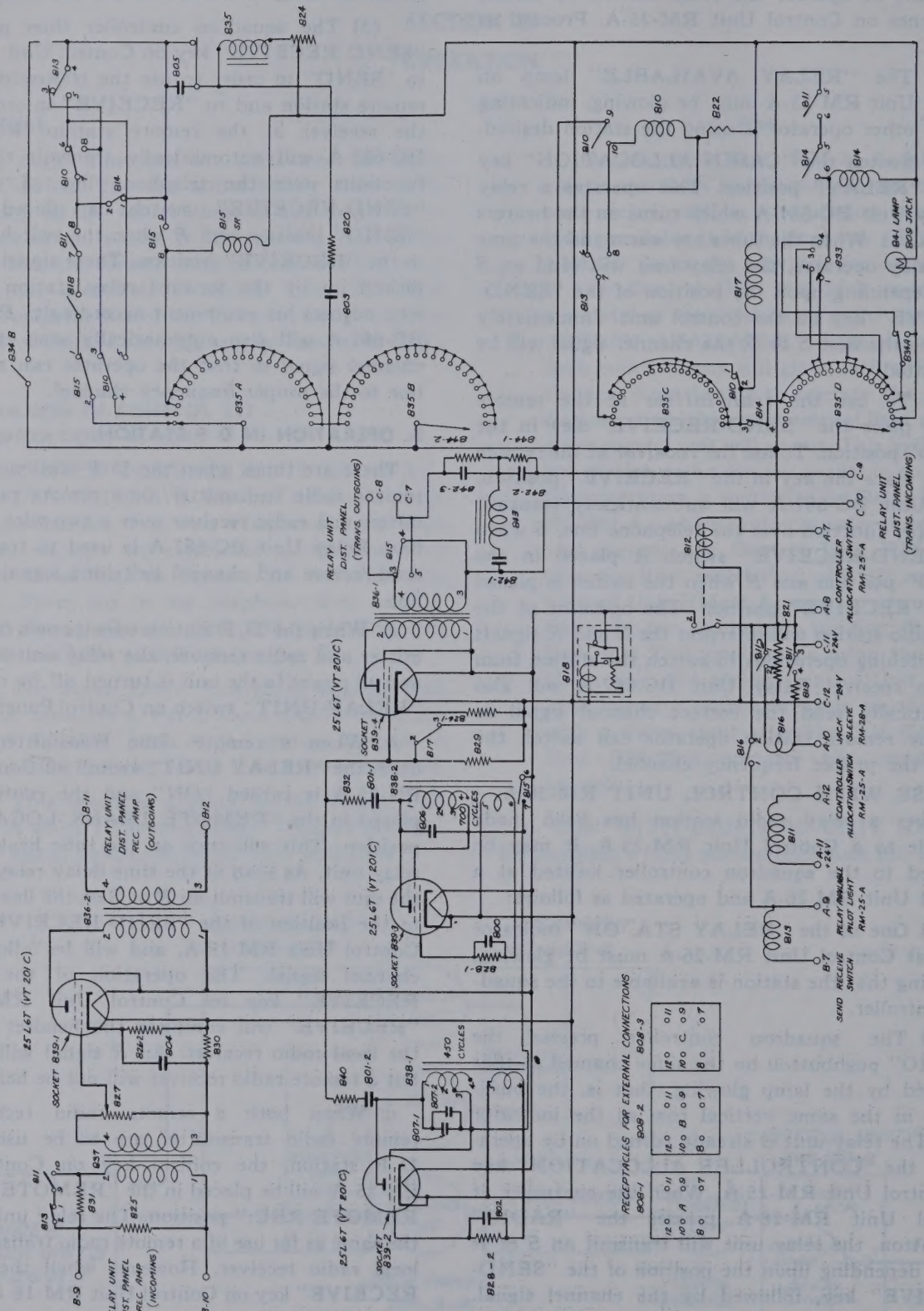

Figure 8 — Relay Unit BC-687-A, Schematic Diagram

SECTION IV
MECHANICAL AND ELECTRICAL CHARACTERISTICS

1. GENERAL.

In figure 19, the contacts which a relay coil operates are not necessarily drawn near the symbol for the relay coil. These contacts are shown in the circuits which they operate, the appropriate relay number, which is located by the contacts, indicates the relay by which the contacts are operated. All contacts are shown on the diagram in the position which they assume when the relay coil is not energized. The contacts are numbered for reference and outwards from the frame of the relay. Note that upon operation, the armature arm of the relays actually moves outwards. A pair of contacts is referred to by the number of the relay which operates them and by their numbers, thus 810 (1,2). The letters *SR* located by a relay indicate that the relay is slow to release. The other relays are essentially instantaneous in action.

The symbol for rotary switch 835 is the same as that for a relay except that an iron core is shown. The self-impulsing contacts are shown above this symbol. The contact banks are ganged and designated 835-A, 835-B, etc. The wiping contact is shown in the home position. See figure 8.

In figure 19 all of the components of the unit are shown in their approximate locations. All of the connections shown are pictorial views of how the parts are wired together.

The electrical characteristics are the same whether the relay unit is used in a control set or D/F station. The external switching is the same except that it is accomplished in different types of control units. However, in the D/F stations, terminal A-10 and the relay 816 and signal lamp circuits are not used.

2. PATCH CIRCUITS.

When a patchcord is inserted between one of the "RELAY LINES" jacks and a "CABIN" jack on Control Unit RM-28-A, 24-volt negative current is applied through a 50-ohm resistance via the sleeve connection of the patchcord to terminal A-10 of Relay Unit BC-687-A. (See the lower right section of fig. 18.) This is connected through the relay 816 operating coil to the junction point of a 225-ohm resistance tapped at 150 ohms. This resistance is connected across the 24-volt current supply. The potential of the tap will be about 13 volts. Relay 816 therefore operates and puts positive 24-volts, via terminals A-9 and D-6 through to the Control Unit RM-25-A terminal D-6 in the appropriate silence cabin, where the "RELAY AVAILABLE" lamp lights accordingly. If the silence cabin operator now places the "CABIN ALLOCATION" key to "RELAY" (the "CONTROLLER ALLOCATION" key being at "OFF" or "LOCAL"), 24 volts is applied across relay 811 in Relay Unit BC-687-A (through D-2 and A-11), which operates and short-circuits the 75-ohm resistance and shunts relay 816 with 30 ohms. This brings the potential of point A-10 (and therefore the sleeves of the "CABIN" and "RELAY LINES" jacks concerned) to positive 16 volts, although still maintaining the requisite voltage (8 volts) across relay 816 to keep it closed.

Note

Relay 811 can only operate after "CABIN ALLOCATION" key at "RELAY" closes, since the 24 volts current to operate 811 comes via the make contacts of the key. See figures 8 and 9.

If two silence cabins are both connected to the same outgoing line, relays 816 on both Relay Units BC-687-A operate, and the "RELAY AVAILABLE" lamps in both silence cabins light, as each relay 816 coil has 8 volts across it. This condition exists until one silence cabin closes relay 811 (by switching to "RELAY"); then the sleeve potential of the "CABIN" jacks at Control Unit RM-28-A (both being connected together) is raised to 16 volts. This results in bringing both sides of the relay 816 coil (see figures 9 and 10), corresponding to the cabin not switched, to approximately the same potential; this causes that relay to drop out, thus cutting off

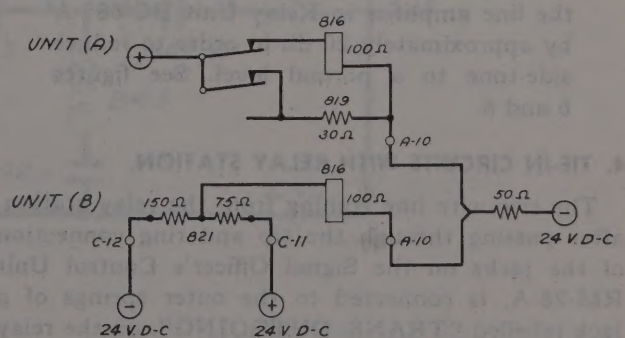

Figure 9 — Relay Unit BC-687-A, Bridge Circuit Schematic

the "RELAY AVAILABLE" lamp. If instead of operating the "CABIN ALLOCATION" key to "RELAY" the "CONTROLLER ALLOCATION" key is placed in "RELAY", then the "CABIN ALLOCATION" key is disconnected from the circuit and the relay 811 circuit is completed by the operation of the "RADIO" pushbutton appropriate to that channel on any one of the controllers' Control Units RM-26-A. See figure 6.

3. CONTROLLER CIRCUITS.

Operation of either or both the "CABIN ALLOCATION" and "CONTROLLER ALLOCATION" keys causes relay 812 in Relay Unit BC-687-A to close, thereby switching on the heaters of the four tubes in the amplifier portion of the unit and applying tube heater voltage to time delay relay 818. See figure 8. This must operate before the automatic code transmitting equipment in the unit can function.

At the end of the delay period, rotary switch 835 performs one complete revolution, sending an *S* or *R*, according to the position of the "SEND-RECEIVE" keys. The *S* or *R* is thus followed by the cabin identification signal. At the end of this revolution of the rotary switch, the silence cabin identification or channel signal mechanism will remain locked up and will not operate again until after relay 811 has been released, that is, until the corresponding silence cabin has gone off the line.

With conditions as above, operation of either the silence cabin operator's or the controller's "SEND-RECEIVE" key to "SEND" will close relay 813 and cause the rotary switch to step around and send an S. Returning the key to "RECEIVE" will release relay 813 and cause another revolution of the rotary switch, this time sending an *R*.

Note

In the "SEND" position of the "SEND-RECEIVE" key a pair of contacts on relay 813 are arranged to reduce the gain of the line amplifier in Relay Unit BC-687-A by approximately 20 db in order to reduce side-tone to a normal level. See figures 6 and 8.

4. TIE-IN CIRCUITS WITH RELAY STATION.

The two-wire line coming from the relay station, after passing through the tip and ring connection of the jacks on the Signal Officer's Control Unit RM-28-A, is connected to the outer springs of a jack labelled "TRANS. OUTGOING", on the relay unit distribution Panel PN-3-A, mounted in the main distribution panel. See figure 6. From the inner springs of this jack the line passes by way of C-7 and C-8 through the tone-keying sections of Relay Unit BC-687-A. From the tone-keying section of the relay unit the circuit goes back by way of C-9 and C-10 to the inner springs of a second jack, labelled "TRANS. INCOMING", also located on relay unit distribution Panel PN-3-A, and from there via the outer springs of the same jack to Control Unit RM-25-A in the silence cabin, where it then passes to the bell set repeater transformer.

The microphone shown symbolically in figure 6 represents the silence cabin or controller's microphones which may be connected to the repeater transformer via the "CABIN ALLOCATION", "CONTROLLER ALLOCATION" and "SEND-RECEIVE" keys, thus permitting speech from the silence cabin or Control Units RM-26-A to be transmitted on the line to the forward relay station.

It will be seen from figures 6 and 7 that the receiving branch from the repeater transformer is taken back to the outer springs of the "REC. AMP.-INCOMING" jack on relay unit distribution Panel PN-3-A, and via the inner springs to terminals B-9 and B-10 on Relay Unit BC-687-A, through a single stage amplifier (top left in figure 8) and back through B-11 and B-12 to the "REC. AMP.-OUTGOING" jack, and via the outer contacts to the telephone receiver at Control Unit RM-25-A or Control Unit RM-26-A.

5. POWER SUPPLY.

Relay Unit BC-687-A is designed for operation from 24 volts d.c., the total load being 1.2 amperes, rising to approximately 2.2 amperes during keying operations. The tubes have indirectly heated cathodes and operate with a heater and plate supply voltage of 24 volts, the grid bias voltage being supplied by cathode resistors. Neither side of the battery is connected to the chassis. For satisfactory operation, the battery voltage should be between 22 and 26 volts.

6. KEYING MECHANISM.

The code keying mechanism employs a 25-point, 4-bank rotary switch, the wipers being 2 on, 2 off, that is, it acts like a 50-point, 2-bank switch. Contact banks 835-A and 835-B provide the circuit for operating mechanism 835 of the rotary switch. See figure 18. This is a self-impulsing electromagnet; its speed of operation is controlled by a variable series resistance 824. The speed is set by trial, using "CHECK" pushbutton 834-A and 834-B and lamp 841 which flashes once every revolution of the wipers. Fifty revolutions per minute is the correct speed.

7. SIGNALING ARRANGEMENT.

The second pair of banks, 835-C and 835-D, provide the code by operating relay 817 over the correct intervals of time. The change of code from *S* to *R* and vice versa is controlled by relay contacts 810 (1, 2). Relay 810 is operated by a contact on 835-C and controlled by contacts 813 (6, 7, 8), resistance 822 being provided so that relay 810 may be released, when locked up by contacts 810 (9, 10), by shorting the coil. The frequency channel signal is controlled by relay contacts 814 (3, 4), the operation of relay 814 being governed by the position of four-position "CODE SELECTOR" switch 833.

When relay 811 is operated, the circuit of the code-sending mechanism is set in operation by the closing of relay contacts 811 (7, 8) and an *S* or *R* signal transmitted, depending on whether relay 813 is operated or not. Following the normal signal is a series of impulses varying from two to five in number (four channels), the number being determined by the point on rotary switch bank 835-D at which relay 814 operates. This point is determined by the setting of "CODE SELECTOR" switch 833. Once relay 814 has operated, it remains locked up through relay contacts 814 (5, 6), 811 (5, 6), and is not released until relay 811 is released. When the line is freed at the end of the period of use, relay 811 is released. In the meantime, the locked up relay 814, together with 811, prevents the channel selection signal from being repeated.

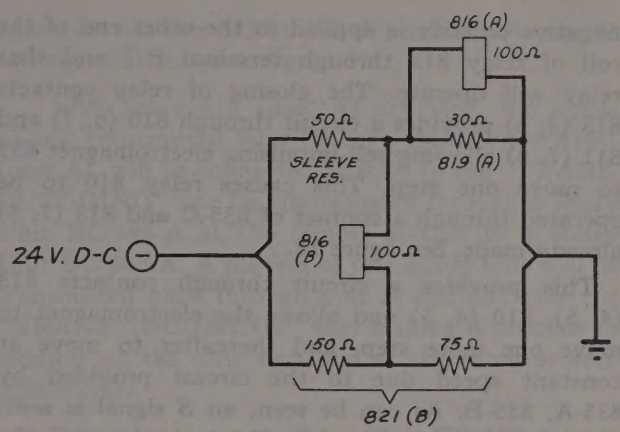

Figure 10 — Relay Unit BC-687-A, Simplified Bridge Circuit Schematic

As previously explained, positive 24-volt polarity is applied to the coil of relay 813 by the operation of relay 816. See figures 9 and 10. When the appropriate switches, including the "SEND-RECEIVE" switch on Control Unit RM-25-A or RM-26-A, are closed (placed in "SEND" position),

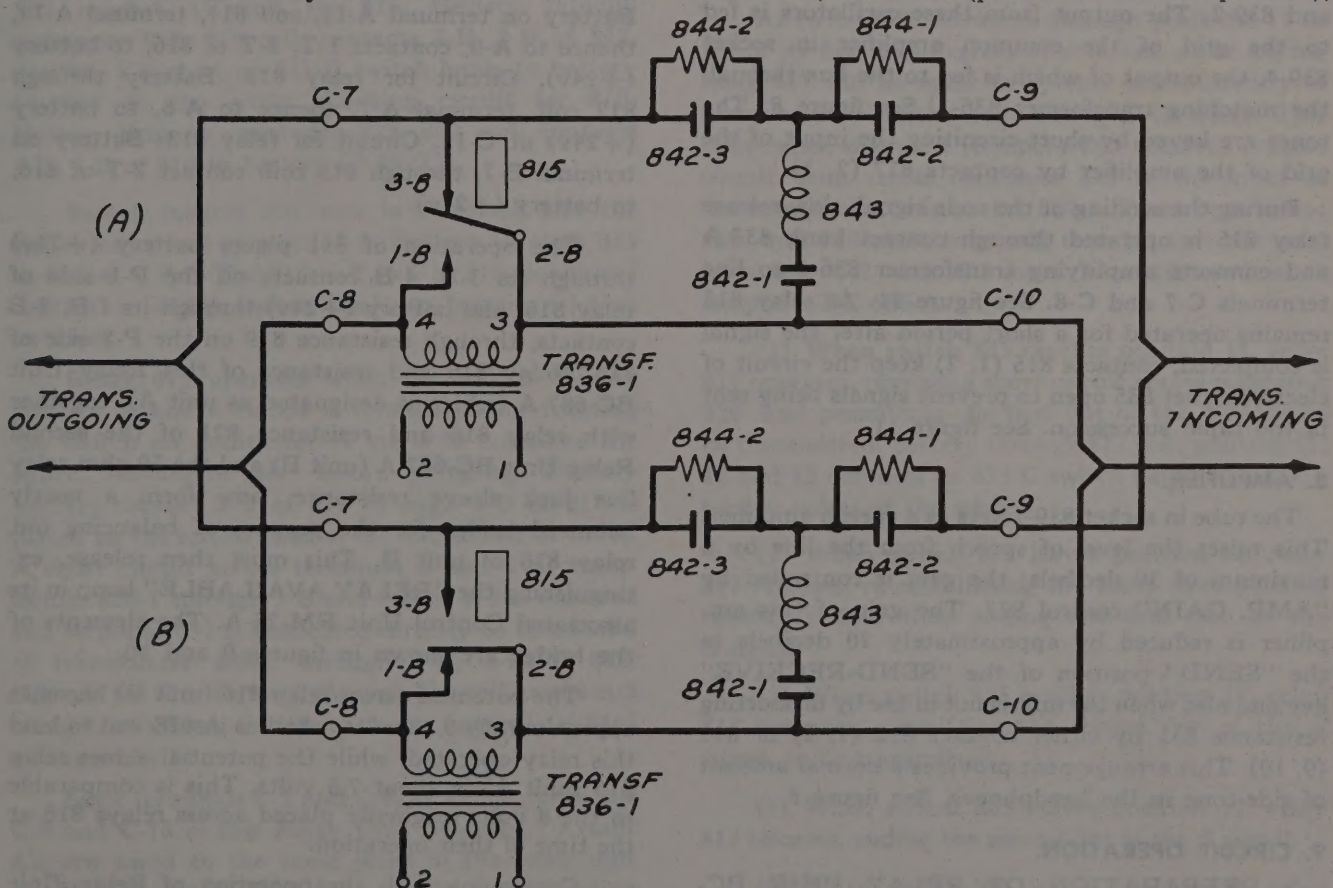

Figure 11 — Simplified Operational Schematic of Relay 815

negative polarity is applied to the other end of the coil of relay 813 through terminal B-7 and that relay will operate. The closing of relay contacts 813 (4, 5) provides a circuit through 810 (6, 7) and 811 (7, 8) allowing self-impulsing electromagnet 835 to move one step. This causes relay 810 to be operated through a contact of 835-C and 813 (7, 8) already made. See figure 18.

This provides a circuit through contacts 813 (4, 5), 810 (4, 5) and allows the electromagnet to move one more step, and thereafter to move at constant speed due to the circuit provided by 835-A, 835-B. As can be seen, an *S* signal is sent. When the circuit of relay 813 is broken by the "SEND-RECEIVE" switch, a circuit is provided through 813 (3, 4) and 810 (7, 8); this allows the electromagnet to move one step. Relay 810 is restored to normal by being shorted by a contact on 835-C and relay contacts 813 (6, 7). This provides a circuit through 810 (3, 4) and 813 (3, 4) allowing electromagnet 835 to move one more step, and then to move at a constant speed as before. This transmits an *R* signal.

The two frequencies (700 and 450 cycles per second) for transmitting the code signals are generated by the two oscillator tubes in sockets 839-3 and 839-2. The output from these oscillators is fed to the grid of the common amplifier in socket 839-4, the output of which is fed to the line through the matching transformer 836-1. See figure 8. The tones are keyed by short-circuiting the input of the grid of the amplifier by contacts 817 (2, 3).

During the sending of the code signal, slow release relay 815 is operated through contact bank 835-A and connects amplifying transformer 836-1 to line terminals C-7 and C-8. See figure 11. As relay 815 remains operated for a short period after the signal is completed, contacts 815 (1, 2) keep the circuit of electromagnet 835 open to prevent signals being sent in too rapid succession. See figure 11.

8. AMPLIFIER.

The tube in socket 839-1 acts as a speech amplifier. This raises the level of speech from the line by a maximum of 30 decibels; the gain is controlled by "AMP. GAIN" control 827. The gain of this amplifier is reduced by approximately 20 decibels in the "SEND" position of the "SEND-RECEIVE" key and also when the unit is not in use by unshorting resistance 831 by either contact 813 (1, 2) or 811 (9, 10). This arrangement provides a normal amount of side-tone in the headphones. See figure 8.

9. CIRCUIT OPERATION.

a. PREPARATION OF RELAY UNIT BC-687-A FOR OPERATION. (*See fig. 6.*)—When a cabin jack is patched to a relay line jack at Control Unit RM-28-A, battery (–24v) through a 50-ohm resistance at the sleeve of the relay line jack is connected through the sleeve of the cabin jack and placed on terminal A-10 of each two Relay Units BC-687-A. Each unit also has battery on its terminals A-11 and C-12 and battery (–24v) on its terminal C-11.

Relay 816 in each unit will operate, placing battery (+24v) on terminal A-9 of its unit and causing the "RELAY AVAILABLE" lamp in the associated cabin Control Unit RM-25-A to light. (Circuit for relay 816: 50-ohm battery at terminal A-10, through 816 coil, center tap of 821 resistance, to battery (+24v) at terminal C-11.)

b. INITIAL OPERATION WITH "SEND-RECEIVE" SWITCH IN "SEND" POSITION.—If key 655-1-2 of one of the Control Units RM-25-A is now closed to initiate a call, a short-circuit will be placed across terminals A-9 and A-12 and across A-7 and A-8 of the corresponding Relay Unit BC-687-A. In the event that the cabin operator's or controller's "SEND-RECEIVE" switch is in the "SEND" position, battery will also be placed on terminal B-7 of the associated Relay Unit BC-687-A. Relays 811, 812, and 813 now operate. (Circuit for relay 811: Battery on terminal A-11, coil 811, terminal A-12, thence to A-9, contacts 1-T, 2-T of 816, to battery (+24v). Circuit for relay 812: Battery through 812 coil, terminal A-7, thence to A-8, to battery (+24v) at C-11. Circuit for relay 813: Battery on terminal B-7, through 813 coil, contact 2-T of 816, to battery (+24v).

The operation of 811 places battery (+24v) through its 3-B, 4-B contacts on the P-1 side of relay 816, and battery (+24v) through its 1-B, 2-B contacts, through resistance 819 on the P-2 side of 816. Relay 816 and resistance of this Relay Unit BC-687-A (which is designated as unit A), together with relay 816 and resistance 821 of the second Relay Unit BC-687-A (unit B) and the 50-ohm relay line jack sleeve resistance, now form a nearly balanced bridge for the purpose of balancing out relay 816 of unit B. This must then release, extinguishing the "RELAY AVAILABLE" lamp in its associated Control Unit RM-25-A. The elements of the bridge are shown in figures 9 and 10.

The potential across relay 816 (unit B) becomes approximately 0.25 volts, which is insufficient to hold this relay operated, while the potential across relay 816 (unit A) is about 7.5 volts. This is comparable to the 8 volts originally placed across relays 816 at the time of their operation.

Continuing with the operation of Relay Unit BC-687-A, the operation or relay 812 places battery

(+24v) through its 2-T, 1-T contacts on all the tube filaments and also on the winding of slow-operating relay 818.

The operation of relay 813 opens a short circuit established by relay 811 across resistance 831 at the receiver amplifier. The gain of this amplifier is thus kept at a 5 to 10 db level.

Relay 818 operates after a delay of 30 seconds following the operation of 812, and completes a circuit from battery (+24v) to the position 1 contact of rotary switch magnet 835. (Circuit for relay 818: Battery through 818 coil, contacts 1-T, 2-T of 812, to battery (+24v).)

Switch magnet 835 operates and then by opening its operating contacts and releasing, steps the wipers out of position 1 into position 2. (Battery through speed control resistance 824, 835 magnet coil and operating contacts 4-T, 5-T of 813 and 1-B, 2-B of 810, or through 1-B, 2-B of 81, 6-B, 5-B of 811, contacts of 818, 2-T, 1-T, of 815, position-1 contact on 835-A switch bank, to battery (+24v) at the wiper.)

Relay 810 now operates and locks, closing a new circuit from battery (+24v) to the contact of 835 magnet. (Circuit for 810: Battery through resistance 822, 810 coil, contacts 3-B, 2-B of 813, position-2 contact on 835-C switch bank, to battery (+24v) on the wiper. Locking circuit for 810: Battery through resistance 822, 810 coil, contacts 4-B, 5-B of 810 to battery (+24v).)

Switch magnet 835 now is energized and the switch advanced to position 3. Battery through 835 as above, 4-T, 5-T of 813, 5-T, 4-T of 810, position-2 contact on 835-A switch bank, to battery (+24v) on wiper.

Relay 815 operates when the switch reaches position 3, and a circuit is established for rotating the switch an additional 47 steps to complete the entire 360-degree arc before stopping. Battery (+24v) contact 2-T of 812 through 5-B of 815 is placed on the screen grids of the two oscillator tubes. A short circuit across terminals 3 and 4 of transformer 836-1 through 1-B and 2-B of 815 is removed and terminal C-7 is connected directly to terminal 3 of transformer 836-1 through 3-B, 2-B of 815. (Circuit for 815: Battery through 815 coil, position-3 contact on 835-A switch bank, to battery (+24v) on the wiper.)

Since terminals C-7 and C-8, as well as terminals C-9 and C-10 of this Relay Unit BC-687-( ) (unit A), are wired to the same jacks in the relay unit distribution Panel PN-3-A as are the corresponding terminals of Relay Unit BC-687-A (unit B), the operation of relay 815 in unit A produces the circuit arrangement shown in figure 11.

With relay 815 (unit A) operated, a-c signal pulses, transmitted later through transformer 836-1 (unit A), will be connected directly to the "TRANS. OUTGOING" line for transmission through a Relay Unit BC-686-A at the remote station to a Relay Unit BC-685-A. A portion of this signal tone will be transmitted back through unit B and out over the "TRANS. INCOMING" line, making it possible to monitor on the code signaling at the cabin or controller units.

Returning again to Relay Unit BC-687-A (unit A): Switch magnet 835 will now be energized and will cause the switch to advance. As the switch is advanced to succeeding positions, it will continue to find battery (+24v) on the 835 magnet, until it has advanced all the way around to its original starting point where, at position 1, it will be unable to advance further. Battery through 835 as above, 3-T, 4-T of 815, position-3 and succeeding position contacts on the 835-A switch bank and all contacts on 835-A switch bank, to battery (+24v) at wiper of bank A or B, depending on the position of rotation of the advancing switch.

As switch 835 advances through positions 11 to 25 on its first 180 degrees of rotation, pulse keying relay 817 will be made to operate intermittently in accordance with the code letter *S* (3 dots). This relay when operated (temporarily) removes a short circuit from across resistance 829 at the input to the amplifier tube in socket 839-4. Three impulses of 450- and 700-cycle tone will thus be sent out past terminals C-7 and C-8 over a telephone line to Amplifier BC-686-A.

(1) When switch 835 reaches position 11, relay 817 operates, removing short circuit across resistance 829, and permitting the first dot of the *S* Code to be transmitted, battery through 817 coil, position 11, 12 and 13 contacts on 835-C switch bank, to battery (+24v volts) at the wiper.

(2) When switch 835 leaves position 13, relay 817 releases, re-establishing the short circuit across resistance 829, thus ending the first dot of the *S* signal.

(3) When switch 835 reaches position 17, relay 817 operates, permitting the second dot of the *S* signal, to be transmitted.

(4) When switch 835 leaves position 19, relay 817 releases, ending the second dot of the *S* signal.

(5) When switch 835 leaves position 23, relay 817 operates, starting the third dot of the *S* signal.

(6) When switch 835 reaches position 25, relay 817 releases, ending the third dot of the *S* signal. As switch 835 continues to advance to position 4 and beyond, on its second 180 degrees of rotation, relay 817 is again actuated to cause a channel selection signal to be transmitted. This signal consists of from two to five pulses, depending upon the position at which "CODE SELECTOR" switch 833 has been set. The code is as follows:

"CODE SELECTOR" switch on 1: pulses sent, 2.

"CODE SELECTOR" switch on 2: pulses sent, 3.

"CODE SELECTOR" switch on 3: pulses sent, 4.

"CODE SELECTOR" switch on 4: pulses sent, 5.

The details of operation are as follows:

(7) When switch 835 reaches position 4 (second 180 degrees), relay 817 operates, and again removes the short circuit across resistance 829, permitting the first dot of the channel selection signal to begin. Battery through 817 coil, 2-T, 1-T of 814, position-4 and -5 contacts of 835-D switch bank to battery (+24 volts).

(8) When switch 835 leaves position 5, relay 817 releases, re-establishing the short circuit across resistance 829, thus ending the first dot of the channel selection signal.

(9) When switch 835 reaches position 8 (second 180 degrees), relay 817 operates and causes the second dot of the channel selection signal to start. Battery through 817 coil, 2-T, 1-T of 814, position 8 and 9 contacts of 835-D switch bank, to ground at wiper.

(10) When switch 835 leaves position 9, relay 817 releases and causes the second dot of the channel selection signal to stop.

(11) When switch 835 reaches position 10 (second 180 degrees), if "CODE SELECTOR" switch 833 has been set on position 1, relay 814 operates and locks up to battery (+24 volts) at 811. The operating path for subsequent operations of 817 is thus opened at contacts 1-T, 2-T of 814, and the third, fourth, and fifth dots of the channel selection signal will not be transmitted. Circuit for 814: Battery through 814 coil, 833 switch position 1, position -10 and -11 contacts of 835 switch bank, to battery (+24 volts) at wiper. Locking circuit: Battery through 814 coil, contacts 4-T, 3-T of 814, 1-T, 2-T of 811 to battery (+24 volts), opened at contacts 1-T, 2-T of 814, and the third, fourth, and fifth dots of the channel selection signal will not be transmitted. Circuit for 814: Battery through 814 coil, 833 switch position 1, position-10 and -11 contacts of 835-D switch bank, to battery (+24 volts) at wiper. Locking circuit: Battery through 814 coil, contacts 4-T, 3-T of 814, 1-T, 2-T of 811 to battery (+24 volts).

(12) When switch 835 reaches position 12 (second 180 degrees), unless "CODE SELECTOR" switch 833 was set at position 1, relay 817 operates, causing the third dot of the channel selection signal to begin.

(13) When switch 835 leaves position 13, if operated, relay 817 releases, ending the third dot of the channel selection signal.

(14) When switch 835 reaches position 14 (second 180 degrees), if "CODE SELECTOR" switch 833 has been set on position 2, relay 814 now operates and locks, thus preventing the fourth and fifth dots of the channel selection signal from being transmitted later. Battery through 814 coil, 833 switch position 2, position-14 and -15 contacts of 835-D switch bank, to battery (+24 volts) at wiper.

(15) When switch 835 reaches position 16 (second 180 degrees), unless "CODE SELECTOR" switch 833 was set on position 1 or 2, relay 817 operates, causing the fourth dot of the channel selection signal to begin.

(16) When switch 835 leaves position 17, if operated, relay 817 now releases, ending the fourth dot of the channel selection signal.

(17) When switch 835 reaches position 18 (second 180 degrees), if "CODE SELECTOR" switch 833 has been set on position 3, relay 814 now operates and locks, thus preventing the fifth dot of the channel selection signal from being transmitted later. Battery through 814 coil, 833 switch position 3, position-18 and -19 contacts of 835-D switch bank to battery (+24 volts) at wiper.

(18) When switch 835 reaches position 20 (second 180 degrees), unless "CODE SELECTOR" switch 833 has been set on positions 1, 2, 3, relay 817 operates, causing the fifth dot of the channel selection signal to begin.

(19) When switch 835 leaves position 21, if operated, relay 817 releases, ending the fifth dot of the channel selection signal.

(20) When switch 835 reaches position 22, if "CODE SELECTOR" switch 833 has been set on position 4, relay 814 now operates and locks, in order that, following subsequent *R* and *S* signals in response to operating the "SEND-RECEIVE" switch during the present radio conversation, no further channel selection signals will be sent. Battery

through 814 coil, switch 833 position 4, normally closed contacts of 834-A key, position-22 and -23 contacts of 835-D switch bank, to battery (+24 volts) at wiper.

(21) When switch 835 reaches position 24, lamp 841 glows. Battery through lamp 841, position-24 and 25 contacts of 835-D switch bank, to battery (+24 volts) at wiper.

(22) When switch 835 leaves position 25 (at end of second 180 degrees):

(*a*) Lamp 841 is extinguished.

(*b*) Switch 835 stops in its normal position. (In position 1 the –24v battery is open.)

(*c*) Relay 815 is de-energized but slow to release. When 815 releases, a short circuit is replaced across terminals 3 and 4 of transformer 836-1, and the short removed between terminal C-7 and terminal 3 of transformer 836-1.

(*d*) The Relay Unit BC-687-A circuit remains in this condition awaiting the operation of the "SEND-RECEIVE" switch to the "RECEIVE" position. While waiting, relays 810, 811, 812, 813, 814, 816, and 818 remain operated.

c. OPERATION OF RELAY UNIT BC-687-A WHEN "SEND-RECEIVE" SWITCH IS CHANGED TO "RECEIVE" POSITION AFTER PREVIOUS OPERATION IN "SEND" POSITION.—At the completion of the operation of Relay Unit BC-687-A with the "SEND-RECEIVE" switch in the "SEND" position, relays 810, 811, 812, 813, 814, 816, and 818 were left operated. If the "SEND-RECEIVE" switch is now changed to the "RECEIVE" position, battery will be removed from terminal B-7 of Relay Unit BC-687-A.

Relay 813 releases, placing a short circuit across resistance 831 at the receiver amplifier for the purpose of raising the over-all gain of the amplifier from between 5 and 10 db to at least 27 db. The short circuit is as follows: From the transformer side of resistance 831, through 4-T, 3-T contacts of 811, 2-T, 1-T contacts of 813, to opposite side of resistance 831. Switch magnet 835 now is energized (following the release of 813) and the switch is advanced to position 2. Circuit for 835: Battery through speed control resistance 824, 835 coil and operating contacts of 835, 4-T, 3-T contacts of 813, 3-B, 2-B of 810, 6-B, 5-B of 811, contacts of 818, 2-T, 1-T of 815, position-1 contact of 835-A switch bank, to battery (+24 volts) at the wiper. Relay 810 now releases, closing a new circuit to operate switch 835.

Relay 810 is released as follows: Battery (+24 volts) from wiper on 835-C switch bank position 2, through 2-B, 1-B contacts of 813 to P-2 side of 810, causes 810 to be shunted down, since 810 already has battery (+24 volts) on its P-1 side from terminal A-12. Switch magnet 835 is energized and advances the switch to position 3. Battery through 835 as above, 4-T, 3-T of 813, 3-T, 4-T of 810, position-2 contact on 835-A switch bank, to battery (+24 volts) at the wiper. Relay 815 operates when the switch reaches position 3, and a circuit is established for rotating the switch an additional four steps to complete the entire 360-degree arc before stopping. Battery (+24 volts) from 2-T, 1-T of 812 through 5-B, 4-B of 815 placed on the screen grids of the two oscillator tubes. A short circuit across terminals 3 and 4 of transformer 836-1 through 1-B, 2-B of 815 is removed and terminal C-7 is connected directly to terminals 3 of transformer 836-1 through 3-B, 2-B of 815. Circuit for 815: Battery through 815 coil, position-3 contact on 835-A switch bank, to battery (+24 volts) on the wiper. Switch 835 magnet will now be energized and will cause the switch to advance. As the switch is advanced to succeeding positions, it will continue to apply battery (+24 volts) to the 835 magnet, until it has advanced all the way around to its original starting point where at position 1 it will be unable to advance further. Battery through 835 as above, 3-T, 4-T of 815, position 3 and succeeding position contacts on the 835-A switch bank and all contacts on the 835-B switch bank, to battery (+24 volts) at wiper of bank A or B, depending on the position of rotation of the advancing switch. As switch 835 advances through positions 5 to 25 on its first 180 degrees of rotation, pulse keying relay 817 will be made to operate intermittently in accordance with the code letter *R* (dot-dash-dot). This relay when operated temporarily removes a short circuit from across resistance 829, at the input to the amplifier tube in socket 839-4. Three impulses of 450- and -700 cycle tone will thus be sent out past terminals C-7 and C-8, over a telephone line to Amplifier BC-686-A, and thence to a Relay Unit BC-685-A. The details of operation are as follows:

(1) When switch 835 reaches position 5, relay 817 operates, removing the short circuit across resistance 829, and permitting the first dot of the *R* code to be transmitted. Battery through 817 coil, contact 1-T, 2-T of 810, position-5, -6 and -7 contacts on 835-C switch bank, to battery (+24 volts) at the wiper.

(2) When switch 835 leaves position 7, relay 817 releases, re-establishing short circuit across resistance 829 and thus ending the first dot of the *R* signal.

(3) When switch 835 reaches position 11, relay 817 operates, causing the dash of the *R* signal to

begin. Battery through 817 coil, position-11, -12 and -13 contacts on 835-C switch bank, to battery (+24 volts) at the wiper.

(4) When switch 835 reaches position 14, a new holding circuit for 817 is established through the 1-T, 2-T contacts of 810 for holding 817 operated while the switch is in positions 14, 15, and 16.

(5) When switch 835 reaches position 17, the original operating circuit of relay 817 is re-established to hold 817 operated during positions 17, 18, and 19.

(6) When switch 835 leaves position 19, relay 817 releases, ending the 9-position-long dash of the *R* signal.

(7) When switch 835 reaches position 23, relay 817 operates, starting the last dot of the *R* signal.

(8) When switch 835 leaves position 25, relay 817 releases, ending the last dot of *R* signal. No channel selection signal will be transmitted as switch 835 continues to advance past position 4 on its second 180 degrees of rotation, since relay 814 remains locked after having been operated at the time the channel selection signal was sent during the initial operation of Relay Unit BC-687-A on this present call.

(9) When switch 835 reaches position 24 (on the second 180 degrees of rotation), lamp 841 is lighted. Battery through lamp 841, position-24 and -25 contacts of 835-D switch bank, to battery (+24 volts) at wiper.

(10) When switch 835 leaves position 24 (at end of second 180 degrees of rotation), lamp 841 is extinguished. Switch 835 stops at its normal position. In position 1, no battery (–24 volts) is available to operate 835 again. Relay 815 is de-energized but is slow-releasing. When 815 releases, the short circuit between terminal C-7 and transformer terminal 3 of 836-1 is removed, and the short circuit is replaced across terminals 3 and 4 of transformer 836-1.

Relay Unit BC-687-A remains in this condition awaiting the operation of the "SEND-RECEIVE" switch to the "SEND" position. While waiting, relays 811, 812, 814, 816, and 818, remain operated.

d. OPERATION OF RELAY UNIT BC-687-A WHEN "SEND-RECEIVE" SWITCH IS CHANGED TO "SEND" POSITION AFTER PREVIOUS OPERATION IN "RECEIVE" POSITION.—At the completion of the operation of Relay Unit BC-687-A with the "SEND-RECEIVE" switch in the "RECEIVE" position, relays 811, 812, 814, 816, and 818 were left operated. If the "SEND-RECEIVE" switch is now changed to "SEND" position, battery will be placed on terminal B-7. Relay 813 operates, opening at its 1-T, 2-T, contacts the short circuit across resistance 831 of the receiver amplifier, thus reducing the gain of this amplifier from 27 db or more to a value between 5 and 10 db. Circuit for 813: Battery at B-7, through 813 coil, 1-T, 2-T of 816, to battery (+24 volts). Switch magnet 835 now is energized (following the operation of 813) and advances to position 2. Battery through speed control resistance 824, 835 coil and operating contacts 4-T, 5-T of 813, 1-B, 2-B of 810, 6-B, 5-B of 811, contacts of 818, 2-T, 1-T of 813, position-1 contact on 835-A switch bank, to battery (+24 volts) at the wiper. From this point on, the operation of Relay Unit BC-687-A is identical to its initial operation with the "SEND-RECEIVE" switch in "SEND" position, except that relay 814 having been operated during the initial operation of Relay Unit BC-687-A on this present call, remains locked. Therefore, no channel selection signal will be transmitted as switch 835 advances through its second 180 degrees.

e. INITIAL OPERATION WITH "SEND-RECEIVE" SWITCH IN "RECEIVE" POSITION.—If the "SEND-RECEIVE" switch is in the "RECEIVE" position when Control Unit RM-25-A key 655-1-2 is closed to initiate a call, a short circuit will be placed across terminals A-9 and A-12 and across A-7 and A-8 of the corresponding Relay Unit BC-687-A, but no battery will be placed on terminal B-7. Relays 811 and 812 will then operate, but relay 813 will remain unoperated. Circuit for 811: Battery on terminal A-11, 811 coil, A-12, thence to A-9, contacts 1-T, 2-T of 816, to battery (+24 volts). Circuit for 812: Battery through 812 coil, terminal A-7, thence to A-8, to battery (+24 volts) at C-11.

Operation of 811, as previously explained, established a nearly balanced bridge which causes relay 816 of Relay Unit BC-687-A (unit B) to release and extinguish the "RELAY AVAILABLE" lamp in its associated Control Unit RM-25-A. The operation of 811 also closed a short circuit across resistance 831 of the receiver amplifier, in order to raise the over-all gain of this amplifier from between 5 and 10 db to at least 27 db. The short circuit is as follows: From the transformer side of 831, through 4-T, 3-T contacts of 811, 2-T, 1-T of 813, to opposite side of resistance 831.

The operation of relay 812 placed battery (+24 volts) through its 2-T, 1-T contacts on all tube filaments and also on the winding of slow-operating relay 818.

Relay 818 operates after a delay of 30 seconds following the operation of 812, and completes a circuit for operating rotary switch 835. Switch magnet 835 operates, advancing the switch from

position 1 to position 2. Battery through speed control resistance 824, 835 coil and operating contacts, contacts 1-B, 2-B of 814, 6-B, 5-B of 811, contacts of 818, 2-T, 1-T of 815, position-1 contact on 835-A switch bank, to battery (+24 volts) at the wiper. Switch magnet 835 is again energized in position 2, advancing the switch to position 3. Battery through 835 as above, 4-T, 3-T of 813, 3-T, 4-T of 810, position-2 contact on 835-A switch bank, to battery (+24 volts) at the wiper.

Relay 815 operates when switch 835 reaches position 3, and a circuit is closed for rotating the switch an additional 47 steps to complete the entire 360-degree arc before stopping. Battery (+24 volts) from 2-T, 1-T of 812 through 5-B, 4-B of 815 placed on the screen grids of the two oscillator tubes. A short circuit across terminals 3 and 4 of transformer 836-1 through 1-B, 2-B of 815 is removed, and terminal C-7 is tied directly to terminal 3 of this transformer through 3-B, 2-B of 815. Circuit for 815: Battery through 815 coil, position-3 contact on 835-A switch bank, to battery (+24 volts) on the wiper. Switch magnet 835 will now be energized and will cause the switch to advance. As the switch is advanced to succeeding positions, it will continue to find battery (+24 volts) on the 835 magnet, until it has advanced all the way around to its original starting point where, at position 1, the switch will be unable to advance further. Battery through 835 as above, 3-T, 4-T of 815, position 3 and succeeding position contacts on the 835-A switch bank and all contacts on the 835-B switch bank to battery (+24 volts) at wiper of bank A or B, depending on the position of rotation of the advancing switch. As switch 835 advances through positions 5 to 25 on its first 180 degrees of rotation, pulse keying relay 817 will be made to operate in accordance with the code letter *R* (dot-dash-dot). This relay, by removing a short-circuit from across resistance 829 at the input to the amplifier tube in socket 839-4, permits impulses of 450- and 700-cycle tone to be transmitted past terminals C-7 and C-8 over a telephone line to an Amplifier Unit BC-686-A and thence to a Relay Unit BC-685-A. The details of operation are as follows:

(1) When switch 835 reaches position 5, relay 817 operates, removing short circuit across resistance 829, and permitting the first dot of the *R* code signal to be transmitted. Circuit for 817: Battery through 817 coil, contacts 1-T, 2-T of 810.

(2) When switch 835 leaves position 7, relay 817 releases, re-establishing a short circuit across resistance 829 and thus ending the first dot of the *R* signal.

(3) When switch 835 reaches position 11, relay 817 operates, causing the "dash" of the *R* signal to begin. Battery through 817 coil, position-11, -12, and -13 contacts on 835-C switch bank, to battery (+24 volts) at the wiper.

(4) When switch 835 reaches position 14, a new holding path for 817 is established. Battery through 817 coil, 1-T, 2-T of 810, position-14, -15, and -16 contacts on 835-C switch bank, to battery (+24 volts) at the wiper.

(5) When switch 835 reaches position 17, a new holding path for 817 is established. Battery through 817 coil, position-17, -18, and -19 contacts on 835-C switch bank, to battery (+24 volts) at the wiper.

(6) When switch 835 leaves position 19, relay 817 releases, ending the "dash" of the *R* signal.

(7) When switch 835 reaches position 23, relay 817 operates, starting the last dot of the *R* signal.

(8) When switch 835 leaves position 25, relay 817 releases, ending the last dot of the *R* signal. As switch 835 continues to advance to position 4 and beyond, on its second 180 degrees of rotation, relay 817 is again actuated to cause a channel selection code signal to be transmitted. The details of circuit operation during this period are identical with initial operation of the unit when the "SEND-RECEIVE" switch is in the "SEND" position. (It will be noted, however, that this time relays 810 and 813 remain unoperated, instead of operated. After switch 835 has reached position 1 and stopped and relay 815 has released, Relay Unit BC-687-A awaits the operation of the "SEND-RECEIVE" switch to the "SEND" position. While waiting, relays 811, 814, 816, and 818 remain operated.

f. DISCONNECTION AT END OF CALL.—At the completion of the call, Control Unit RM-25-A key 655-1-2 will be restored to normal, removing the short circuit across terminals A-7 and A-8, and across A-9 and A-12, also (if "SEND-RECEIVE" switch is in "SEND" position) battery is removed from terminal B-7 of the associated Relay Unit BC-687-A. All operated relays except 816 will release. Since relay 816 on the second Relay Unit BC-687-A is no longer balanced out by the bridge circuit, this relay will re-operate, re-lighting the "RELAY AVAILABLE" lamp in its associated Control Unit RM-25-A. Relay Units BC-687-A are now ready for the initiation of another call. If instead of another call being made, the patching cord at Control Unit RM-28-A is removed, thus disconnecting the cabin jack from the relay line jack, both relays 816 will release, and Relay Units BC-687-A will then be completely restored to normal.

g. OPERATION OF SPEED ADJUSTING KEY. If key 834-A-B is operated, switch 835 is continuously operated. Battery through 824 resistance, 835 coil and operating contacts, key 834-B contacts, to battery (+24 volts). As the switch passes by positions 22, 23, 24, and 25 on the second 180 degrees of each rotation, lamp 841 will be lighted to indicate each complete rotation of the switch.

★

SECTION V
MAINTENANCE

CAUTION

Do not attempt maintenance of switches and relays in the field. All repairs on this relay unit are to be made only by trained personnel equipped with specific maintenance instructions, test equipment, and tools provided for this purpose. If the relay unit fails to operate properly, notify the maintenance depot at once. Do not attempt to use the unit until it has been repaired.

1. TROUBLE LOCATION AND REMEDY.

This section contains all the charts and instructions necessary for the maintenance of this equipment possible in the field. Some phases of maintenance work are impossible except in the factory and are not to be attempted in the field. A breach of this caution may result in damaging the equipment beyond repair. If the test equipments and procedures for this unit are used properly, there is no possible fault or defect that cannot be located quickly and easily.

When Relay Unit BC-687-A is not operating properly, first make absolutely sure that the fault lies in this unit and not in one of the other station components. If it is found that the unit is defective and that the trouble must be repaired from within, disconnect and remove it from the rack. Figure 12 shows the exact location of the parts in the unit and their reference numbers. Use this illustration at all times when checking parts referred to by number and symbol on the schematic and wiring diagrams.

2. OPERATIONAL INSPECTION.

A periodical inspection of Relay Unit BC-687-A should be made by competent maintenance personnel to determine whether the equipment is in proper working order. If an operating test is made in the station, it should be possible to determine whether the equipment is operating normally. The conditions under which the equipment is being used will determine the frequency of these periodic inspections. Ordinarily, inspections should be made once a month.

Note

For concise details of the method and procedure for adjusting Relay Unit BC-687-A, refer to paragraph 2, section II.

a. Check to make certain that the 24-volt supply is providing full voltage.

b. Inspect the plugs at the rear of the chassis to make certain that they are securely seated.

c. Operate Relay Unit BC-687-A according to instructions given in section III of this book.

3. OPERATIONAL TESTS.

a. Insert vacuum tubes into their respective sockets and apply +24-volts to terminal C-11 and -24-volts to terminal C-12. Insert thin strips of insulating material between the contacts of pulsing relay 835 and relay 810, contacts (3-4) top. Check the position of the wiper arms on their respective banks, 835-A, 835-B, 835-C, and 835-D, to see that they agree with that shown in figure 13.

b. Connect a jumper across terminals A-7 and A-8 and check to see that relay 812 operates. With relay 812 closed, the tube filaments should light and time delay relay 818 should operate, after a period of approximately 30 seconds, to close a pair of contacts connected in series with the first contact point on bank 835-A.

c. Connecting terminal A-10 through a 50-ohm, 10-watt resistor to -24-volts should close relay 816, contacts (1-2) top, and apply +24 volts to one side of relay coil 813 and terminal A-9. Connect +24 volts and -24 volts to terminals A-11 and A-12. Relay 811 should operate to close its contacts 1-B and 2-B, 3-B and 4-B, 1-T and 2-T, 5-B and 6-B, and 3-T and 4-T. The circuit from the first contact point of bank 835-A to the fixed contact of pulsing relay 835 should now be closed.

d. Removing the insulating strip from between the contacts of relay 835 should cause the relay to operate and move the wiper arms on banks 835-A and 835-C to the second contact point on their respective banks.

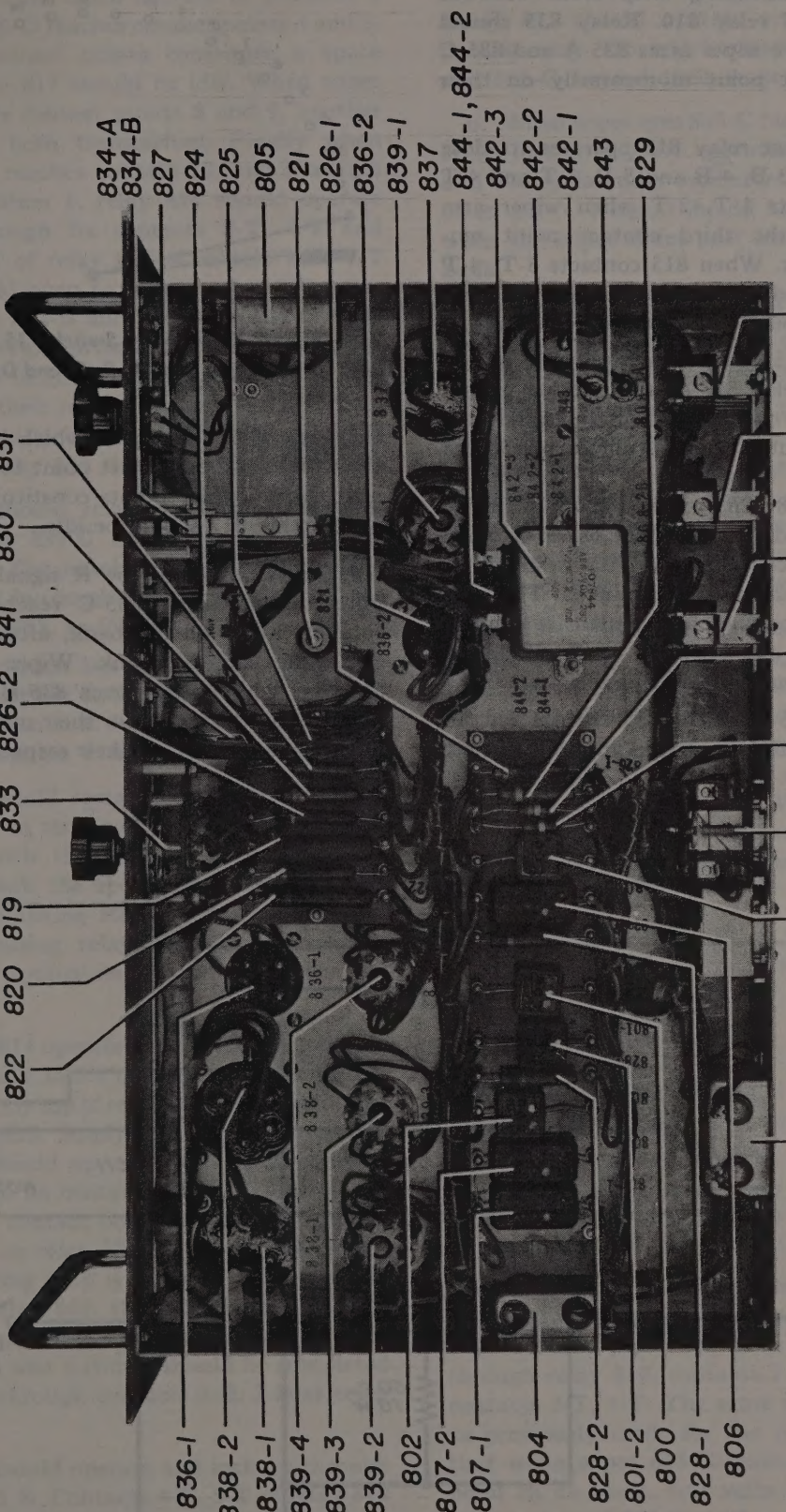

Figure 12 — Relay Unit BC-687-A, Bottom View

e. Remove the insulating strip from between contacts 3-T, 4-T of relay 810. Relay 835 should again operate to move wiper arms 835-A and 835-C to the third contact point momentarily on their respective banks.

f. Check to see that relay 815 operates to close its contacts 2-B and 3-B, 4-B and 5-B, 3-T and 4-T and open its contacts 1-T, 2-T when wiper arm 835-A has reached the third contact point momentarily on its bank. When 815 contacts 3-T, 4-T close, relay 835 should operate to move wiper arms 835-A and 835-C around their respective banks.

g. When wiper 835-C reaches the fifth contact point on the bank, relay 817 should operate to key the 450- and 700-cycle oscillators through its contacts 1-T, 2-T. The audio output signal from the oscillators should be monitored with a pair of telephones at terminals C-7 and C-8. The contact points on bank 835-C are so connected that when the wiper arm has reached the seventh contact point, the first dot of an *R* (•—•) signal has been transmitted. The next three contact points on the bank constitute a space between the first dot and the dash of the *R* signal, and so relay 817 should not operate.

h. When wiper 835-C reaches contact 11 on the bank, relay 817 should again operate to transmit

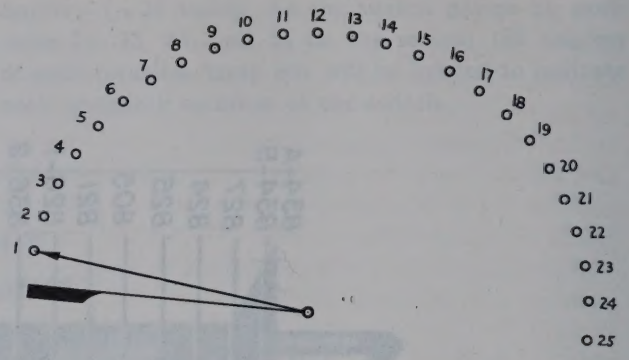

Figure 13 — Rotary Switch 835 Contact Points on A, B, C, and D

the dash of the *R* signal, which is completed when the wiper reaches contact point 19 on the bank. The next three contact points constitute a space, during which relay 817 should be idle.

i. The last dot of the *R* signal should be transmitted when wiper 835-C reaches the last three contact points on the bank, after which the wiper arm slides off the bank. Wiper arm 835-A does likewise, while wiper arms 835-B and 835-D have rotated 180 degrees from their original position and have made contact on their respective banks.

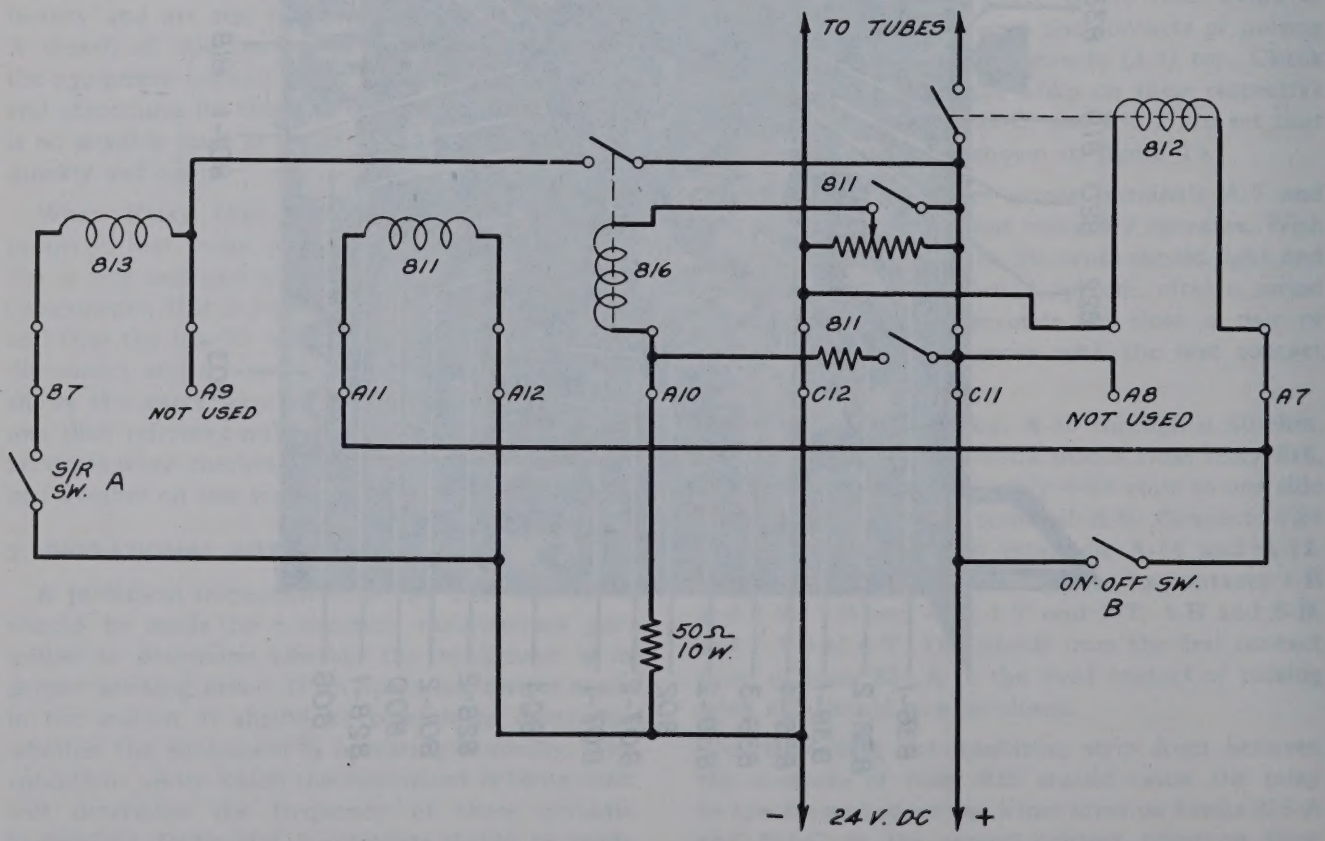

Figure 14 — Wiring Diagram for Performance Test

j. Relay 817 should again operate to transmit a dot when wiper 835-D reaches contact points 4 and 5. The next two contact points constitute a space during which relay 817 should be idle. When wiper arm 835-D reaches contact points 8 and 9, another dot should have been transmitted. Finally when wiper arm 835-D reaches contact 10, and if switch 833 is set on position 1, relay 814 should operate and lock up through its contacts 3-T, 4-T and contacts 1-T, 2-T of relay 811. Contacts 1-T, 2-T of relay 814 should open to release relay 817, after which wiper arms 835-B and 835-D return to their original position. Wiper arms 835-A and 835-C have now reached their original position also at the first contact point on their respective banks. Since relay 814 is operated and locked up, its contact 1-B, 2-B should be open; relay 835 therefore cannot operate.

k. Relay 815 should release a short time after wipers 835-A and 835-C have returned to their original position. The number of dots transmitted after the *R* signal is completed is controlled by the position of switch 833, as follows:

Position 1: two dots
Position 2: three dots
Position 3: four dots
Position 4: five dots

l. Relay 814 should remain operated as long as voltage is applied to terminals A-11 and A-12, C-11 and C-12, and with the jumper connected across A-7 and A-8. Check the speed at which the wiper arms rotate by adjusting R824, which is connected in series with pulsing relay coil 835. The speed should be set at approximately 50 revolutions per minute.

m. With relay 814 operated and voltage applied to the above terminals, insert thin insulating strips between contacts (4-5) top of relay 810 and the contacts of pulsing relay 835. Apply −24 volts to terminal B-7. Relay 813 should operate to close its contacts 4-T, 5-T and open its contact 1-T, 2-T. The circuit between the first contact point on bank 835-A and the fixed contact on relay 835 should now be closed. When the insulating strip is removed from between the contacts of relay 835, the relay should operate to move wiper arm 835-A to the second contact point on its bank, and a circuit should be completed to relay coil 810 through contacts 2-B, 3-B of relay 813.

n. Relay 810 should operate and lock up through its contacts 4-B, 5-B. Contacts 4-T, 5-T of relay 810 close to complete a circuit to relay 835. If the insulating strip is removed from between the contacts 4-T, 5-T of relay 810, relay 835 should operate to move wiper arm 835-A to the third contact point on the bank, thus closing a circuit to relay 815. Relay 815 should operate and close a circuit to pulsing relay 835 which rotates wiper arms 835-A and 835-C around their respective bands.

o. When wiper arm 835-C reaches contact point 11 on its bank, relay 817 operates to key the 450-cycle and 700-cycle audio oscillators, and so the first dot of an *S* (• • •) signal should have been transmitted when the wiper slides past contact point 13 on the bank.

p. The next three contact points constitute a space between the first and second dots of the *S* signal; so relay 817 should be de-energized.

When wiper arm 835-C reaches contact point 17 on the bank, relay 817 should again operate to transmit another dot of the *S* signal, which is completed when the wiper arm reaches contact point 19 on the bank. The next three contact points provide a space period between the second and third dots, and relay 817 should be idle.

q. When the wiper reaches contact point 23 on the bank, relay 817 should again operate, and the final dot of the *S* signal should have been transmitted when wiper arm 835-C slides past contact point 25 on the bank. Contacts 1-T, 2-T of relay 810 and 1-T, 2-T of relay 814 should be open during transmission of the *S* signal. Wiper arms 835-B and 835-D should now have rotated 180 degrees from their original position and continue rotating around their respective banks.

r. If switch 833 is still on position 1, no further dot signals should be transmitted because relay 814 is operated. Its contacts 1-T, 2-T open the circuit to keying relay 817.

s. Wiper arms 835-A, 835-B, 835-C, and 835-D now return to their original positions; relay 815 releases and restores its contacts to normal.

t. The circuit between the first contact point on bank 835-A and pulsing relay 835 should be open at contacts 1-B, 2-B of relay 810 and contacts 1-B, 2-B of relay 814.

u. If −24 volts is removed from terminal B-7, relay 813 releases and a circuit is completed from the first contact point on bank 835-A to relay 835 through relay 810, contacts 2-B, 3-B and relay 813 contacts 3-T, 4-T. The same sequence of operations as previously made for the *R* signal follows. Note that when wiper 835-C reaches the second contact point on its bank, +24 volts is applied to the other end of relay coil 810 through contacts 1-B, 2-B of relay 813, which raises both sides of relay coil to the same potential and causes relay 810 to release and restore its contacts to normal. Contacts 3-T, 4-T of relay 810

should now be closed to prepare a circuit to relay 817 and pulsing relay 835 for the next operation.

v. Check the speed of rotation of rotary switches 835-A, 835-B, 835-C, and 835-D by closing switch 834-B. This energizes the pulsing relay directly, causing lamp 841 to flash once per revolution of wiper arm 835-D.

4. DISASSEMBLING UNIT.

a. Remove the three plugs at the rear of the chassis.

b. Unscrew the four machine screws passing through the slots at each side of the front panel. See figure 5.

c. Grasp the handles on the front panel and lift the unit out of the frame.

d. Set the unit on a bench and remove the dust cover at the rear by unscrewing the two thumbscrews.

5. REASSEMBLING UNIT.

a. After a unit has been removed from a rack and all of the necessary maintenance work completed, replace it in the frame in the following manner:

(1) Replace the dust cover and insert and tighten the thumbscrews holding it in place.

(2) Pick the unit up by the front handles and insert it in its proper place in the rack.

(3) Screw in the four machine screws that pass through the slots at each side of the front panel. See figure 5.

(4) Return the three plugs to their sockets on the rear of the chassis.

b. Periodically make a routine inspection of the unit for small defects that may cause serious trouble. At regular intervals go over the unit thoroughly, following the procedure listed below. If this is done properly, a minimum of maintenance and repair work will be required for the unit.

6. INSPECTION AND OVERHAUL.

a. Inspect all nuts, bolts, and screws. Make certain they are tight.

b. Remove all loose solder, dirt, and metallic chips.

c. Clean equipment thoroughly with a soft cloth.

d. Touch up scratched paint.

e. Inspect soldered joints.

f. Inspect wiring.

g. Resolder any connection where solid wires are broken.

h. Clean all plug connectors.

i. Check all tubes with a Model 504-A set tester. If tube plate current is less than 80 percent of normal with 25 volts on the heater, replace the tube with a new one. Also replace all tubes used over 500 hours.

j. When tubes are replaced in sockets, see that each is securely seated.

7. LUBRICATION.

Relay Unit BC-687-A does not require lubrication.

CAUTION

Always be very careful when using any type of oil or grease around the unit as lubricants can damage it.

8. LOCATION AND REMEDY OF FAULTS.

a. After finding the defective major circuit by means of the tests in paragraph 3, this section, to find the defective branch of the circuit make continuity tests of each branch. If measured values are normal, that particular branch of the circuit is probably not at fault and needs no further attention. When a defective branch is found, check its components to locate the defective part. The identifying symbols of all components are given on the diagram; their normal value can be determined by referring to the Table of Replaceable Parts. Refer to figures 4, 10, 12, and 19 for aid in locating the components.

b. Test for the location of open and short circuit faults by following an orderly procedure rather than by testing at random points. If the measured values obtained are different from the values given in the charts, check the circuit by measuring the resistance of each component with the VoltOhmyst, Jr., using it as an ohmmeter.

c. Check capacitors for either a short or open circuit. Resistance values of components and their permissible tolerances are given in the Table of Replaceable Parts.

d. If a resistor or capacitor cannot be isolated from the circuit any other way, unsolder one of the leads of the component before checking it. Check the following tables of measurements with a VoltOhmyst, Jr.

9. RESISTANCE MEASUREMENTS.

These resistance values for the various circuits can be obtained by using the VoltOhmyst as an ohmmeter.

a. RESISTANCE MEASUREMENTS TO TUBE SOCKET TERMINALS.—All values measured in ohms with VoltOhmyst, Jr. used as ohmmeter. Tolerance ±10%. Common terminal of ohmmeter connected to C-12. Controls 824 and 827 in clockwise position.

Socket	1	2	3	4	5	6	7	8
839-1	Infinity	0	100	3	25,000	Infinity	3	230
839-2	0	0	Infinity	Infinity	50,000	Infinity	3	0
839-3	0	0	Infinity	Infinity	50,000	Infinity	3	0
839-4	0	0	100	3	0	Infinity	3	230

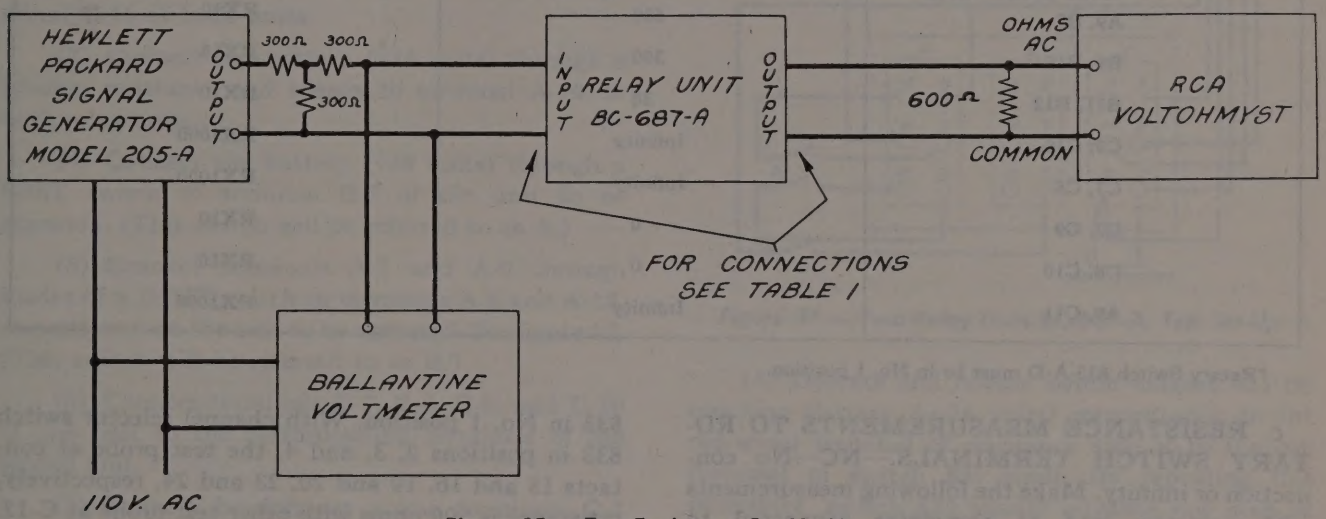

Figure 15 — Test Equipment Set-Up No. 1

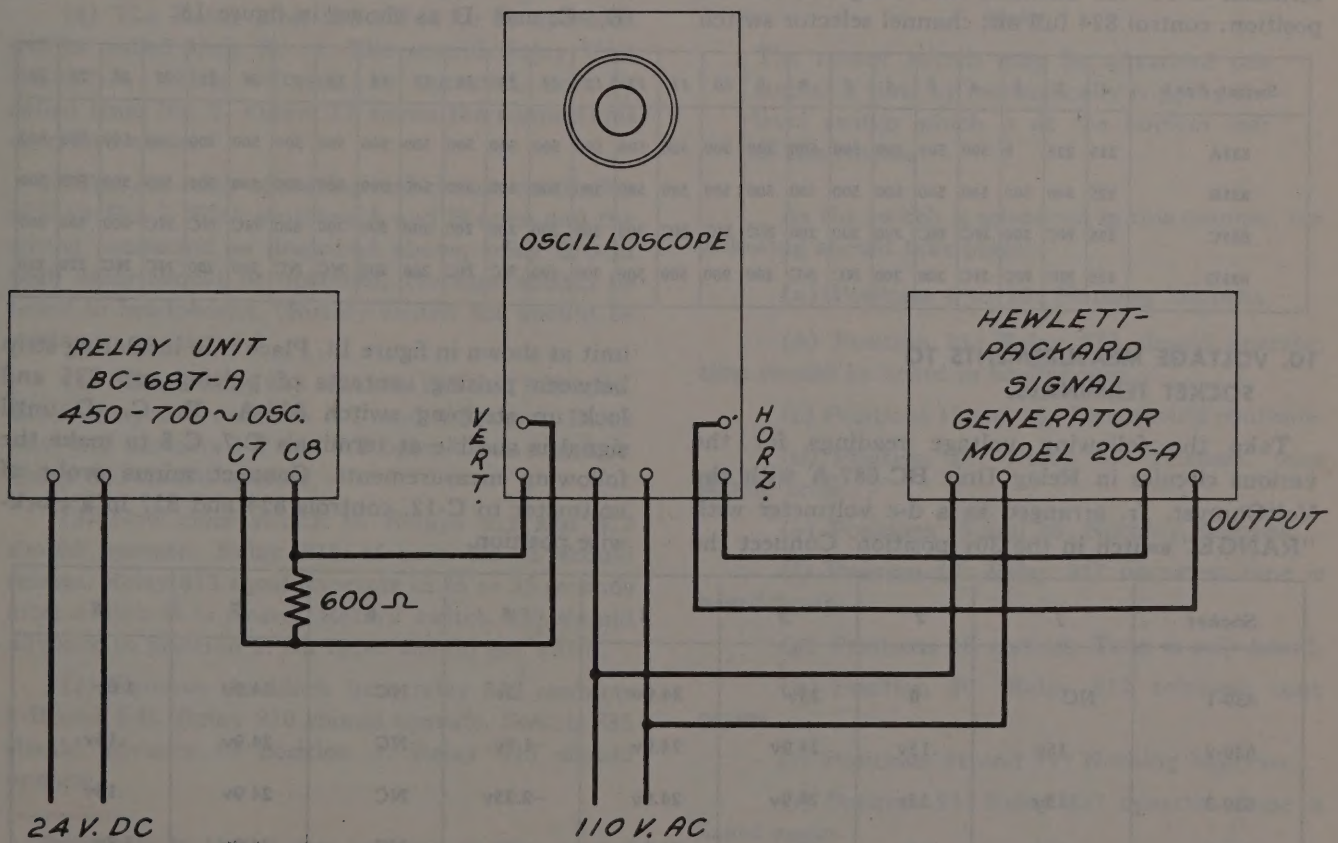

Figure 16 — Test Equipment Set-Up No. 2

b. RESISTANCE MEASUREMENTS OF TERMINALS.

Terminal Designation	*Resistance Ohms ±10%*	*Ohmmeter Scale*
A7, C12	500	RX10
A8, A10	175	RX10
C11, C12	225*	RX10
A11, A12	500	RX10
A9, B7	500	RX10
B9, B10	300	RX10
B11, B12	36	RX10
C9, C10	Infinity	RX1000
C7, C8	Infinity	RX1000
C7, C9	0	RX10
C8, C10	0	RX10
A9, C11	Infinity	RX1000

*Rotary Switch 835-A-D must be in No. 1 position.

c. RESISTANCE MEASUREMENTS TO ROTARY SWITCH TERMINALS.—NC—No connection or infinity. Make the following measurements with common lead of ohmmeter connected to terminal C-12. All switches and relays in normal position; control 824 full on; channel selector switch 833 in No. 1 position. With channel selector switch 833 in positions 2, 3, and 4, the test probe at contacts 15 and 16, 19 and 20, 23 and 24, respectively, resistance is 500 ohms with other test probe at C-12. Tolerance ±10%. Make the connections to 835-A, -B, -C, and -D as shown in figure 13.

Switch Bank	*1*	*2*	*3*	*4*	*5*	*6*	*7*	*8*	*9*	*10*	*11*	*12*	*13*	*14*	*15*	*16*	*17*	*18*	*19*	*20*	*21*	*22*	*23*	*24*	*25*	*26*
835A	225	225	9	500	500	500	500	500	500	500	500	500	500	500	500	500	500	500	500	500	500	500	500	500	500	500
835B	225	500	500	500	500	500	500	500	500	500	500	500	500	500	500	500	500	500	500	500	500	500	500	500	500	500
835C	225	NC	200	NC	NC	200	200	200	NC	NC	NC	200	200	200	200	200	200	200	200	200	NC	NC	NC	200	200	200
835D	225	NC	NC	NC	200	200	NC	NC	200	200	500	500	200	200	NC	NC	200	200	NC	NC	200	200	NC	NC	220	220

10. VOLTAGE MEASUREMENTS TO SOCKET TERMINALS.

Take the following voltage readings for the various circuits in Relay Unit BC-687-A with the VoltOhmyst, Jr. arranged as a d-c voltmeter with "RANGE" switch in the 30v position. Connect the unit as shown in figure 14. Place thin insulating strip between pulsing contacts of pulsing coil 835 and lock up stepping switch 835-A, -B, -C, -D until signal is audible at terminals C-7, C-8 to make the following measurements. Connect minus probe of voltmeter to C-12, controls 824 and 827 in a clockwise position.

Socket	*1*	*2*	*3*	*4*	*5*	*6*	*7*	*8*
839-1	NC	0	23v	24.9v	.2v	NC	24.9v	1.6v
839-2	.15v	.15v	24.9v	24.9v	−1.7v	NC	24.9v	.15v
839-3	.15v	.15v	24.9v	24.9v	−2.25v	NC	24.9v	.15v
839-4	.15v	.15v	23v	24.9v	.2v	NC	24.9v	1.8v

11. OPERATING ANALYSIS CHECK.

a. Connect two Relay Units BC-687-A together to check the operation of the bridge circuit by which relay 816 of the unoperated unit is balanced out and caused to release. Make connections to the two units as follows (see fig. 17):

(1) Connect the battery (–24 volts) to terminals A-11 and C-12 of both Relay Units BC-687-A.

(2) Connect the battery (+24 volts) to terminal C-11 of both units.

(3) Connect the battery (–24 volts) through a 50-ohm resistance and thence to terminal A-10 on both relay units.

(4) Connect the battery (–24 volts) through a SPST switch to terminal B-7 of the unit to be operated. (This switch will be referred to as A.)

(5) Connect terminals A-7 and A-9 through blades of a DPST switch to terminals A-8 and A-12, respectively, on the unit to be operated. See figure 17. (This switch will be referred to as B.)

(6) Connect terminals C-7, C-8, C-9, and C-10 of one unit to the corresponding terminals of the second unit.

(7) Connect headphones across terminals C-7 and C-8 for monitoring the tone signals.

(8) The Relay Unit BC-687-A to be operated will be called Unit No. 1. The second Relay Unit BC-687-A, which will not be operated, will be called Unit No. 2. Figure 17 shows the connections described above.

b. Test for relay operating and circuit continuity of Unit No. 1. With switches A and B open and the wiring connected as described above, relay 816 in both units should be operated. No tone should be heard in headphones. (Rotary switch 836 should be resting in position 1.)

(1) *Block relay 813 contacts 2-B and 3-B open. Block relay 814 contacts 3-T and 4-T open. Block relay 815 contacts 3-T and 4-T open. Close switch A. Relay 813 should operate.

(2) Now close switch B. Relays 811 and 812 should operate. Relay 816 of unit No. 2 should release. Relay 818 should operate in 25 to 35 seconds after switch B is closed. Rotary switch 835 should advance to position 2. All tubes should get warm.

(3) Remove the block from relay 813 contacts 2-B and 3-B. Relay 810 should operate. Switch 835 should advance to position 3. Relay 815 should operate.

*Relays may be blocked open by means of paper inserted between the contacts.

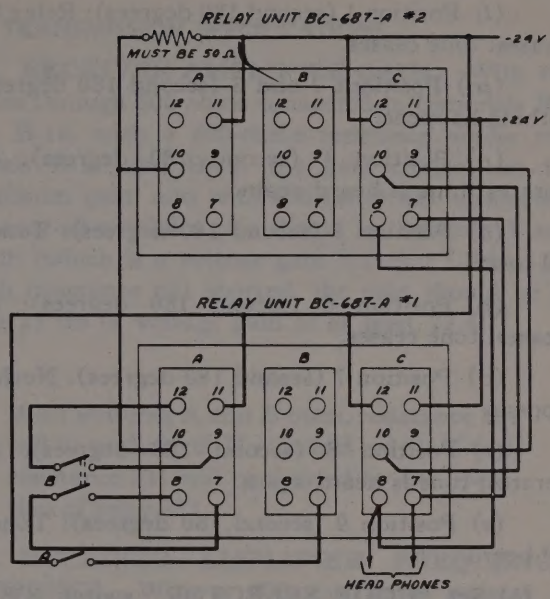

Figure 17 — Two Relay Units BC-687-A, Test Set-Up

(4) Operate and release switch magnet 835 by touching battery (+24 volts) momentarily to the red-wired terminal of resistance 820, or to the coil terminal of switch 835 itself. By repeating this procedure, switch 835 should advance one step at a time.

Note

The rotary switch may be advanced one step at a time by mechanically tripping the level switch which is at the bottom rear of the switch.

As the switch is advanced in this manner, the following should take place:

(*a*) Position 4 to 10: Nothing happens.

(*b*) Position 11: Relay 817 should operate; tone should be heard in headphones.

(*c*) Positions 12 and 13: Tone should continue.

(*d*) Position 14: Relay 817 releases; tone should cease.

(*e*) Positions 15 and 16: Nothing happens.

(*f*) Position 17: Relay 817 operates; tone is heard again.

(*g*) Positions 18 and 19: Tone is still heard.

(*h*) Position 20: Relay 817 releases; tone ceases.

(*i*) Positions 21 and 22: Nothing happens.

(*j*) Position 23: Relay 817 operates; tone is heard again.

(*k*) Positions 24 and 25: Tone is still heard.

(*l*) Position 1 (second 180 degrees): Relay 817 releases; tone ceases.

(*m*) Positions 2 and 3 (second 180 degrees): Nothing happens.

(*n*) Position 4 (second 180 degrees): 817 operates; tone is heard again.

(*o*) Position 5 (second 180 degrees): Tone is still heard.

(*p*) Position 6 (second 180 degrees): 817 releases; tone ceases.

(*q*) Position 7 (second 180 degrees): Nothing happens.

(*r*) Position 8 (second 180 degrees): 817 operates; tone is heard again.

(*s*) Position 9 (second 180 degrees): Tone is still heard.

(5) Set "CODE SELECTOR" switch 833 to position 2, 3, or 4. Advance rotary switch 835 to position 10 (second 180 degrees); 817 releases and tone ceases.

(6) Reset "CODE SELECTOR" switch 833 to position 1; 814 should operate.

(*a*) Position 11 (second 180 degrees): Nothing happens.

(*b*) Position 12 (second 180 degrees): 814 releases; 817 operates; tone is heard again.

(*c*) Position 13 (second 180 degrees): Tone is still heard.

(*d*) Position 14 (second 180 degrees): 817 releases; tone ceases.

(*e*) Reset "CODE SELECTOR" switch 833 to position 2; 814 operates.

(*f*) Position 15 (second 180 degrees): Nothing happens.

(*g*) Position 16 (second 180 degrees): 814 releases; 817 operates; tone is heard again.

(*h*) Position 17 (second 180 degrees): Tone is still heard.

(*i*) Position 18 (second 180 degrees): 817 releases; tone ceases.

(*j*) Reset "CODE SELECTOR" switch to position 3: 814 operates.

(*k*) Position 19 (second 180 degrees): Nothing happens.

(7) Remove block from 814 contacts 3-T, 4-T. Advance rotary switch to position 20 (second 180 degrees): Nothing happens.

(8) Replace block between 814 contacts 3-T, 4-T: 814 releases; 817 operates; tone is heard again.

(*a*) Position 21 (second 180 degrees): Tone is still heard.

(*b*) Position 22 (second 180 degrees): 817 releases; tone ceases.

(9) Remove block from 814 contacts 3-T, 4-T. Reset "CODE SELECTOR" switch to position 4: 814 operates.

(10) With battery (+24 volts) on rotary switch magnet 835 to hold it energized, operate key 834 (check pushbutton on front of panel): lamp 841 glows.

(11) Restore key 834.

(12) Remove battery (+24 volts) from magnet 835, causing the rotary switch to step to position 23 (second 180 degrees): Nothing happens.

(*a*) Position 24 (second 180 degrees): lamp 841 glows.

(*b*) Position 25 (second 180 degrees): lamp 841 remains lighted.

(*c*) Position 1 (normal position): lamp 841 goes out; 815 releases; relays 810, 811, 812, 813, 814, 816, and 818 remain operated.

(13) Check to see that no short-circuit is present across resistance 831. Block open 613 contacts 1-B, 2-B. Open switch A only; 813 releases; switch 835 advances to position 2.

(14) Resistance 831 should now test short-circuited. Remove block at 813 contacts 1-B, 2-B; 810 releases. Switch 835 advances to position 3; 815 operates.

(15) Operate and release switch magnet 835 by touching battery (+24 volts) momentarily to the red-wired terminal of resistor 820, or to the coil terminal of 835 itself. As the switch is advanced, a step at a time, the following should take place:

(*a*) Position 4: Nothing happens.

(*b*) Position 5: 817 operates; tone should be heard at the headphones.

(*c*) Positions 6 and 7: Tone is still heard.

(*d*) Position 8: 817 releases; tone ceases.

(*e*) Positions 9 and 10: Nothing happens.

(*f*) Position 11: 817 operates; tone is heard again.

(*g*) Positions 12 to 19: Tone is still heard.

(*h*) Position 20: 817 releases; tone ceases.

(*i*) Positions 21 and 22: Nothing happens.

(*j*) Position 23: 817 operates; tone is heard again.

(k) Positions 24 and 25: Tone is still heard.

(*l*) Position 1 (second 180 degrees): 817 releases; tone ceases.

(*m*) Positions 2 to 25 (second 180 degrees): Nothing happens.

(*n*) Position 1 (normal position): 815 releases. Relays 811, 812, 814, 816, and 818 should remain operated.

(16) Open switch B: 811, 812, 814, and 818 release; 816 remains operated; 816 of unit No. 2 should operate.

(17) Remove block from relay 815 contacts 3-T, 4-T. Operate key 834: Switch 835 should start advancing continuously, and lamp 841 should light as the switch passes through positions 22 to 25 of each second 180 degrees.

(18) Release key 834: Switch rotates to normal position 1 and stops.

(19) Adjust resistance 824 until rotary switch 835 makes 50 revolutions per minute.

12. NORMAL OPERATING TESTS.

a. INITIAL *S* SIGNAL.

(1) Set "CODE SELECTOR" switch 833 on position 1.

(2) Close switch A.

(3) Close switch B. Rotary switch 835 should rotate through 360 degrees. An *S* signal (3 dots) followed by a 2-dot channel selection code should be heard.

(4) Open switch B only.

(5) Reset "CODE SELECTOR" switch to position 2.

(6) Close switch B: An *S* signal followed by a 3-dot channel selection code should be heard.

(7) Open switch B.

(8) Reset "CODE SELECTOR" switch to position 3.

(9) Close switch B: An *S* signal followed by a 4-dot channel selection code should be heard.

(10) Open switch B.

(11) Reset "CODE SELECTOR" switch to position 4.

(12) Close switch B. An *S* signal followed by a 5-dot channel selection code should be heard.

b. SUBSEQUENT *S* SIGNAL, FOLLOWING AN *R* SIGNAL ON THE SAME CALL.

(1) Open switch A: An *R* signal, *with no channel selection signal* should be heard.

(2) Open switch B.

(3) This completes the normal operation tests.

13. TRANSMISSION SPECIFICATIONS.

a. RECEIVER AMPLIFIER GAIN.—With 400 cycles through 600 ohms connected to terminals B-9 and B-10, with a 600-ohms resistance across terminals B-11 and B-12, the gain control set for maximum gain, and with resistance 831 unshorted, the over-all amplifier gain should be between 5 and 10 db (which is a voltage gain between 1.8 to 3.2). With resistance 831 shorted, the gain should be at least 27 db (a voltage gain of at least 22.4).

Note

With switches A and B open, resistance 831 will be unshorted. If switch B only is closed, resistance 831 will be shorted by the operation of relay 811.

b. RECEIVER AMPLIFIER FREQUENCY RESPONSE.—With a 600-ohm series resistor in input (terminals B-9 and B-10), a 600-ohm terminating resistor across the output (B-11, B-12), the gain control set for maximum gain, resistor 831 shorted, and the input voltage held constant, the output level should not change more than 4 db over a frequency range of 200-4000 cycles.

c. OSCILLATOR FREQUENCY.—With amplifier output (C-7, C-8) terminated in 600-ohms, the frequencies of the 450- and 700-cycle oscillators measured at output terminals C-7, C-8 shall be within 428-472 cycles and 666-735 cycles, respectively. The frequency can be changed by changing the wire connection on terminals 2, 3, 4 of transformers 838-1 and 838-2.

Note

Before making this test, block open relay 815 contacts 3-T, 4-T. Then close switch B only, advancing switch 835 to position 3. Then step switch 835 to position 5 by twice applying battery (+24 volts) momentarily to the 835 magnet terminal (red wire). [In this position (5) relay 812 will connect battery (+24 volts) to the filaments; relay 815 will connect battery (+24 volts) to screen grids of oscillator tubes and also connect transformer 836-1 directly to terminals C-7, C-8, while 817, being also operated, removes the short across resistance 829.]

d. OSCILLATOR OUTPUT.

(1) 450 CYCLES.—With the amplifier output terminated in 600-ohms across C-7, C-8 and the 700-cycle oscillator tube (at 839-3) removed, the 450-cycle output measured at output terminals C-7, C-8, shall not be less than 1.35 volts (3 db below zero level).

(2) 700-CYCLES.—Test as above, but with the 450-cycle oscillator tube (at 839-2) removed instead of the 700-cycle oscillator tube.

14. REPLACING DEFECTIVE COMPONENTS.

a. GENERAL.—After a defective component is found, replace it with an identical component from the spare parts provided. Check the data in the table of replaceable parts to be sure that the new component is properly identified. The new part must comply in every respect with the data in the parts list. Before a part is removed from the unit, make note of the leads connected to it and unsolder them. Avoid bending the wires out of shape too much when removing them from the component. Apply the soldering iron only long enough to soften the soldered joint, as too long application of the soldering iron may loosen the terminal or other connections on nearby components.

Generally a component can be removed with a small wrench and screwdriver. *Do not* use pliers where a wrench can be used to loosen nuts.

Note that a lockwasher is provided directly beneath each nut and that a plain flat washer is located between the lockwasher and panel or chassis. Always replace washers and nuts in this order.

When new parts are installed, use the same screws and bolts as used for old parts. Do not tighten nuts or bolts too tightly.

b. RESOLDERING WIRES.—Use only rosin core or special radio solder when resoldering wires. *Never use paste or acid flux.* Be sure that the terminal and wire have been thoroughly cleaned and tinned before attempting to make the joint. Fasten wire to the terminal mechanically by twisting wire around terminal; clip before soldering. Be sure to heat the wire and terminal with the soldering iron until hot enough that solder will flow into joint. Remove excess solder from joint.

c. VACUUM TUBE REPLACEMENT.—Remove the dust cover. Successively replace each of the tubes with a new Tube VT-201-C until the defective tube is located. (See par. 1c, sec. II, for method of inserting vacuum tubes.)

d. PILOT BULB REPLACEMENT.—Using the tools provided for this purpose, remove the glass cap and burned out bulb from the front panel. Replace it with a new 24-volt pilot bulb.

15. RELAY MAINTENANCE.

a. GENERAL.—Servicing of telephone-type relays such as are used in Relay Unit BC-687-A is limited to contact cleaning. *Do not attempt any other kind of repair.* Never bend the springs, for this may shift the fulcrum point. Factory adjusters "iron" the spring and give it a "bow" in the desired direction. This kind of adjustment is generally permanent, and any trouble with the relays is usually due to a glaze or dirt in the contacts. *Do not use sandpaper, crocus, cloth, or a file* (not even a "contact file") to clean the relay contacts. Burnish or polish the relay contacts. A flat toothpick dipped in carbon tetrachloride is usually satisfactory. Contact burnishers, consisting of a thin, flexible, metal strip slightly roughened by sand-blasting or etching (or made of soft metal such as nickel silver, milled like the edge of a coin), are commercially available. These burnishers are designed to remove only dirt and glaze, not metal. Pressure for the work must be provided only by the closed contacts.

b. INSPECTION.—Make both an electrical and mechanical inspection to keep the relays in good working order.

(1) ELECTRICAL INSPECTION.—Resistance of the relay coils as measured with the resistance bridge should agree with both the coding and Stromberg-Carlson specifications. A tolerance of ±5% is allowed unless otherwise specified in Specification B-9064.

Each relay must operate on the specified pick-up current value. Pick-up should not be sluggish except in the case of slow action relays, which are distinguished from the others by an added copper ring approximately 5/8-inch at either end of the coil. Pick-up current values and coil resistance for both primary and secondary (if present) windings, are shown in the following chart.

Note

Since Relay 504-5-1 is operated in a vertical position, examine armature movement and spring clearance in said position for that relay.

Part Number	*Ohms*	*Amps.*
+505-2-1	200	0.048
+506-1-1	500	0.012
506-19-1	500	0.028
506-28-1	500	0.033
506-48-1	500	0.028
+506-70-1	500	0.016
+504-1-1	100	0.027
603-40-2	500	0.028

(2) MECHANICAL INSPECTION.—All relays are adjusted mechanically to break contact on operation or release, as the case may be, at a particular specified gram pressure applied at the point of contact. With but one exception, all relays are routinely adjusted to 30 ±5 grams pressure. In the above chart, a further gram test, the total unoperated pressure measured at the armature, is indicated by "+" in front of the specified relay.

16. OVER-ALL PERFORMANCE TESTS.

a. GENERAL.—The procedure described in the foregoing paragraphs may be followed with Relay Unit BC-687-A located at the station. If it is found that the relay unit is not functioning properly after the routine checks described have been made, disassemble the unit as described in paragraph 4, this section, and transport it to the regular service depot, which must be equipped with the test apparatus listed below. Obtain a spare relay unit from the service depot; install it at the station in place of the defective unit, and place in operation.

Note

Take extreme care in transporting equipment of this type to avoid excessive jar of the components and to prevent marring the surface finish.

b. TEST EQUIPMENT.

(1) The following equipment will be needed at the service depot for making standard tests on Relay Unit BC-687-A:

1 Audio Signal Generator Model 205A
1 Electronic Voltmeter Model 300
1 VoltOhmyst, Jr., Model 165
1 Model 504-A Set Tester
1 Oscilloscope
1 50-ohm, 10-watt resistor
2 600-ohm resistors
3 300-ohm resistors
1 Set of test leads and plugs

(2) The following sources of power must be available:

110v, 60-cycle, single-phase alternating current
24v d.c. storage battery

(3) Set up Relay Unit BC-687-A for each test as described. *Do not* make any tests of Relay Unit BC-687-A at the service depot until after rechecking all tubes on the set tester. *Do not* operate any of the test instruments until completely familiar with their operation as described in the individual instruction book supplied with each test instrument.

c. TEST PROCEDURES.—The following tests shall be made only by qualified maintenance personnel:

(1) AMPLIFIER GAIN.

(*a*) Purpose of Test: To measure over-all amplifier gain.

(*b*) Object of Test: Gain must not be less than 27 db (voltage gain of 22.4) with series resistor 831 shorted and between 5 and 10 db (voltage gain between 1.8 to 3.2) with resistor 831 unshorted.

(*c*) Test Set-Up: Connect test equipment and Relay Unit BC-687-A as shown in figure 16 after connecting Relay Unit BC-687-A as shown in figure 14. Short-circuit 831.

(*d*) If output is less than 1.5 volts as read on the VoltOhmyst, Jr., when the Voltmeter reads 0.06 volts, the amplifier circuit is defective.

(2) OSCILLATOR FREQUENCY TEST.

(*a*) Purpose of Test: To check frequencies of oscillators.

(*b*) Object of Tests: Frequencies must be 450 cycles and 700 cycles ±5 percent.

(*c*) Test Set-Up: Connect Relay Unit BC-687-A as shown in figure 14 and connect the test equipment as shown in figure 17.

Note

Place a thin insulating strip between the contacts of 835 pulsing coil and lock up stepping switch 835-A, -B, -C, -D until a signal is audible at terminals C-7, C-8.

(*d*) Test Procedure—450 cycles:

1. Remove the 700-cycle oscillator tube.

2. Set signal generator dial at 450 cycles.

3. Note pattern on oscilloscope.

4. Signal generator dial may be varied between 428 and 472 cycles until a rounded triangle pattern is obtained on the oscilloscope. If the pattern is not obtained in the range of 428 to 472 cycles, the oscillator is off range and should be adjusted.

5. To adjust the frequency of the 450-cycle oscillator, vary the connection on transformer 838-1. Do not move the lead on terminal 1, but the other lead may be connected to terminal 2, 3, or 4. The lowest frequency is obtained with the lead on terminal 2.

(*e*) Test Procedure—700 cycles:

1. Remove the 450-cycle oscillator tube.

2. Set signal generator dial at 700 cycles.

3. Note pattern on oscilloscope.

4. The signal generator dial may be varied between 666 and 735 cycles until a rounded triangle pattern is obtained on the oscilloscope. If the pattern is not obtained in the range of 666 to 735 cycles, the oscillator is off range and should be adjusted.

5. To adjust the frequency of the 700-cycle oscillator, vary the connection on transformer 838-2. Do not move the lead on terminal 1, but the other lead may be connected to terminal 2, 3, or 4. The lowest frequency is obtained with the lead on terminal 4, the highest frequency with the lead on terminal 2.

(3) OSCILLATOR OUTPUT TEST.

(*a*) Purpose of Test: To measure the output of 450-cycle and 700-cycle oscillators.

(*b*) Object of Test: Output, measured at output of code amplifier, must not be lower than minus 3 db below zero level.

(*c*) Test Set-Up: Connect the Voltmeter to terminals C-7, C-8 of Relay Unit BC-687-A. The two terminals are shunted with a 600-ohm resistor.

(*d*) Output of 450-cycle oscillator:

1. Remove the 700-cycle oscillator tube.

2. Ballantine Voltmeter should read not less than 1.35 volts.

(*e*) Output of 700-cycle oscillator:

1. Remove the 450-cycle oscillator tube. (Replace 700-cycle oscillator tube.)

2. Ballantine Voltmeter should read not less than 1.35 volts.

(4) TIME DELAY RELAY TEST.

(*a*) Purpose of Test: To measure operation of time delay relay.

(*b*) Object of Test: Time delay relay should close in 30 seconds ±5 seconds, with input of 24 volts.

(*c*) Test Set-Up: Connect Relay Unit BC-687-A as shown in figure 15. Use a stop watch to time relay operation.

(*d*) Open and close external "ON-OFF" switch. Check time delay from instant switch is closed to instant when time delay relay operates. If time is less than 25 seconds or more than 35 seconds, time delay relay is defective and must be replaced.

(5) ROTARY SWITCH SPEED TEST.

(*a*) Purpose of Test: To check speed of rotation of rotary switch.

(*b*) Object of Test: The rotary switch should operate smoothly over a speed range from 50 revolutions a minute to 90 revolutions a minute at 24 volts input.

(*c*) Test Set-Up: Connect Relay Unit BC-687-A as shown in figure 15. Use a stop watch or watch with a second hand to time operation.

(*d*) Press 834-A, -B. Rotary switch should operate and lamp 841 should flash once per revolution. Count the revolutions made in one minute. If more than 60 or less than 36 revolutions are made in a minute, the speed of the rotary switch must be adjusted. The speed may be varied by adjusting speed control rheostat 824. Final operating speed should be adjusted to 50 r.p.m.

(6) CODE SIGNAL TEST.

(*a*) Purpose of Test: To check transmission of code signals.

(*b*) Object of Test: To obtain the proper code signals for each function.

(*c*) Test Set-Up: Connect Relay Unit BC-687-A as shown in figure 14. Connect a pair of headphones to terminals C-7, C-8.

(*d*) For each operation of the code relay, open and close the external "ON-OFF" switch on Fuse Panel PN-2-A, -B or Control Panel PN-25-A. The relay will operate to send code functions after the proper time interval. Read the code functions by listening to the headphones. Set the external "SEND-RECEIVE" switch and the "CODE SELECTOR" switch on Relay Unit BC-687-A for each function as shown below.

External S/R Switch	*Channel Selector Switch Position*	*Code Signal*
Open	1	•—• ••
Closed	1	••• ••
Open	2	•—• •••
Closed	2	••• •••
Open	3	•—• ••••
Closed	3	••• ••••
Open	4	•—• •••••
Closed	4	••• •••••

RMA COLOR CODES

CAPACITORS (MMFD)

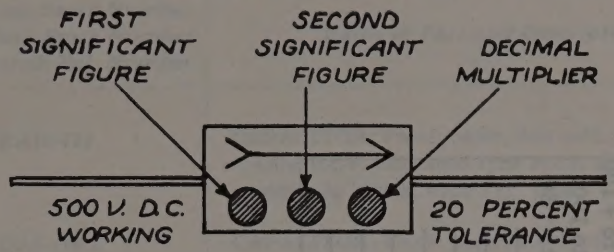

Color	Numeral	Volts	Multiplier	Tolerance
Black	0		1	
Brown	1	100	10	1%
Red	2	200	100	2%
Orange	3	300	1,000	3%
Yellow	4	400	10,000	4%
Green	5	500	100,000	5%
Blue	6	600	1,000,000	6%
Violet	7	700	10,000,000	7%
Gray	8	800	100,000,000	8%
White	9	900	1,000,000,000	9%
Gold		1000	0.1	5%
Silver		2000	0.01	10%
No Color		500		20%

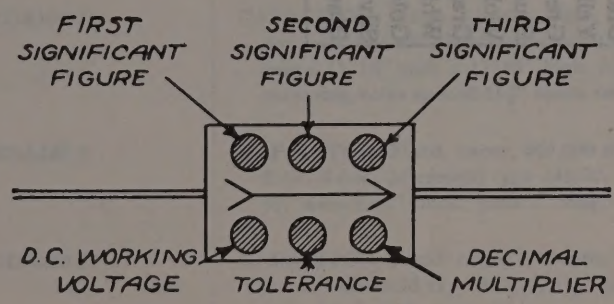

RESISTORS (OHMS)

Color	A 1st Digit	B 2nd Digit	C Multiplier
Silver			0.01
Gold			0.1
Black		0	1.0
Brown	1	1	10
Red	2	2	100
Orange	3	3	1,000
Yellow	4	4	10,000
Green	5	5	100,000
Blue	6	6	1,000,000
Purple	7	7	10,000,000
Gray	8	8	100,000,000
White	9	9	

D—TOLERANCE CODE:

Gold = 5% Silver = 10% No Color = 20%

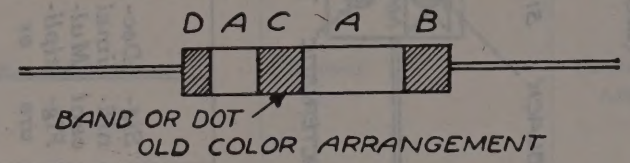

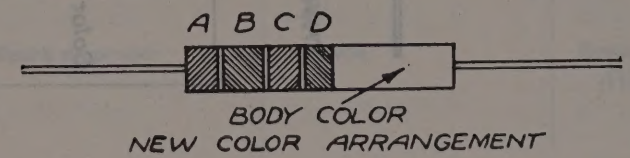

Body Color (new color arrangement only) indicates type of resistor, as follows:

BLACK Composition, non-insulated

TAN, OLIVE OR WHITE Composition, insulated

DARK BROWN Wire-wound, insulated

AMERICAN WAR STANDARD SIX-DOT COLOR CODE FOR CAPACITORS

(MOLDED MICA)

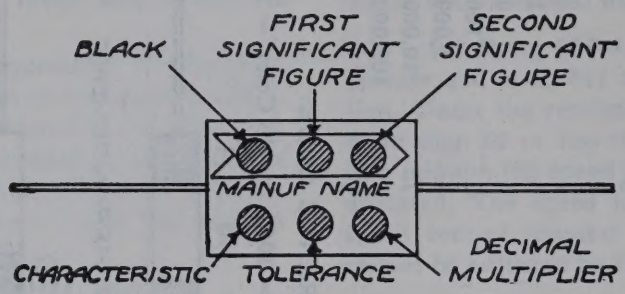

Color	Significant Figure	Decimal Multiplier	Tolerance	Characteristic	
				Maximum Capacitance Drift	Temperature Coeeficient Parts/Million/°C
Black	0	1	—	—	—
Brown	1	10	—	—	—
Red	2	100	2%	0.5%	−200 to +200
Orange	3	1000	—	0.2%	−100 to +100
Yellow	4	—	—	0.05%	0 to 100
Green	5	—	—	0.025%	0 to −50
Blue	6	—	—	—	—
Violet	7	—	—	—	—
Gray	8	—	—	—	—
White	9	—	—	—	—
Gold	—	0.1	5%	—	—
Silver	—	0.01	10%	—	—
Black	—	—	20%	—	—

SECTION VI

TABLE OF REPLACEABLE PARTS

MODEL: RELAY UNIT BC-687-A*

Reference Symbol	*Army Stock Number Navy Stock Number British Ref. Number*	*Name of Part and Description*	*Function*	*Mfr. and Desig. or AWS Type*	*Cont. or Govt. Dwg. or Spec. No.*
800	3KA10-222	CAPACITOR: Fixed, paper, 0.01 mfd., ±20%, 400v, d.c.w. Micamold type 342-9; 1 7/16" long x 3/4" wide x 5/16" thick, leads 1 1/2" long	700-cycle osc. grid	Micamold	Bendix dwg. A104605-9
801-1	3DA2-116.2	CAPACITOR: Fixed, paper; 0.002 mfd., ±20%, 400v, d.c.w. Micamold type 340-11; 1 5/32" long x 5/8" wide x 1/4" thick, leads 1 1/2" long	700-cycle osc. plate	Micamold	Bendix dwg. A104605-10
801-2	3DA2-116.2	Same as 801-1	450-cycle osc. plate	Micamold	Bendix dwg. A104605-10
802	3KA10-222	Same as 800	450-cycle osc.	Micamold	Bendix dwg. A104605-9
803	3DB1.630	CAPACITOR: Fixed, 1 mfd., 600v, d.c.w. Aerovox type 630; 2" long x 2" wide x 1 1/8" high, 3/16" dia. mounting holes spaced 2 3/8" apart.	Spark suppressor	Aerovox	Bendix dwg. A104560-1
804	3DA250-30	CAPACITOR: Fixed, 0.25 mfd., 400v d.c.w., Aerovox type 430; 1-13/16" long x 15/16" wide x 13/16" thick; 2 3/16" dia. mounting holes spaced 2 1/8" apart center to center, located on 2 mounting lugs, 2 1/2" long.	Rec. amp. cathode	Aerovox	Bendix dwg. A104561
805	3DA100-74	CAPACITOR: Fixed, 0.1 mfd., 600v, d.c.w., Aerovox type 630, Spark suppressor; 1-13/16" long x 15/16" wide x 13/16" high, 2 3/16" dia. mounting holes spaced 2 1/8" apart center to center	Spark suppressor	Aerovox	Bendix dwg. A104562
806	3DA200-4	CAPACITOR: Fixed, paper, 200,000 mmf. ±5%, 200v, d.c.w., Micamold type 345-27, 1 7/16" long x 3/4" wide x 3/8" thick; leads 2" long.	700-cycle osc. tank	Micamold	Bendix dwg. A104605-7
807-1	3DA250-32	CAPACITOR: Fixed, paper 0.25 mfd, ±5%, 200v, d.c.w. Micamold type 345-20, 1 7/16" long x 3/4" wide x 3/8" thick; leads 2" long.	450-cycle osc. tank	Micamold	Bendix dwg. A104605-8

*NOTE - This unit can be replaced only as a complete unit, not in part.

Reference Symbol	*Army Stock Number Navy Stock Number British Ref. Number*	*Name of Part and Description*	*Function*	*Mfr. and Desig. or AWS Type*	*Cont. or Govt. Dwg. or Spec. No.*
807-2	3DA250-32	Same as 807-1	450-cycle osc. tank	Micamold	Bendix dwg. A104605-8
808-1	2Z5596	JACK: 6-conductor, Jones, cat. No. P-406-AB-¾, male receptacle 1¼" high—(2) #20 mounting holes, spaced 2 5/16" apart	Plug receptacle	Howard Jones	Bendix dwg. A104537
808-2	2Z5596	Same as 808-1	Plug receptacle	Howard Jones	Bendix dwg. A104537
808-3	2Z5596	Same as 808-1	Plug receptacle	Howard Jones	Bendix dwg. A104537
809	4C9761.3	SOCKET: Lamp, switchboard, supervisory, Stromberg-Carlson #13, 2-29/32" long x ½" dia. shell, #4 mounting screw	Pilot light	Stromberg-Carlson	Bendix dwg. A104502
	4C2431B	CAP: Lamp, switchboard, red, Stromberg-Carlson #31B HVI Indicator "ON" metal ring nickel plated.	Pilot light	Stromberg-Carlson	Bendix dwg. A104503-1
810	2Z7639-29	RELAY: Single wound, 500 ohms, 24-volt d.c., Stromberg-Carlson type No. 500; dwg. No. 506-48-1; 3 7/8" long (overall) x 7/8" wide x 1-19/32" high, 2 mounting holes for 8-32 tap spaced ½" apart center to center.	Code keying	Stromberg-Carlson	Bendix dwg. L73226-8
811	2Z7699-9	RELAY: Stromberg-Carlson #506-70-1 single winding, 500 ohms, 24-volts; left side contacts 2 make right side contacts, 3 make, overall length 3 7/8" x 1-19/32" high x 7/8" wide. (2) #8-32 tapped holes, ½" mounting center to center.	Control	Stromberg-Carlson	Bendix dwg. L73226-9
812	2Z7699-10	RELAY: Stromberg-Carlson type #500 single winding, 500 ohms, 24-volts d.c.; contacts 1A, Stromberg-Carlson dwg. #506-1-1, 3 7/8" long x 7/8" wide x 1-19/32"; high (2) mounting holes #8-32 tap spaced ½"	Power	Stromberg-Carlson	Bendix dwg. L73226-10
813	2Z7699-11	RELAY: Single winding, 500 ohms, 24-volt d.c., Stromberg-Carlson type 500, dwg. #506-28-1, contacts 1B and 2C, 3 7/8" long by 7/8" wide by 1-19/32" high; (2) #8-32 tapped mounting holes spaced ½" apart.	Send-receive	Stromberg-Carlson	Bendix dwg. L73226-11

814	2Z7699-12	RELAY: Single winding, 500 ohms, 24-volts, d.c., Stromberg-Carlson #506-19-1 contacts 2B, 1A, 3⅞" long x ⅞" wide x 1-9/32" high, (2) #8-32 tapped mounting holes ½" apart.	Channel selector	Stromberg-Carlson	Bendix dwg. L73226-12
815	2Z7699-2	RELAY: Single wound, 500 ohms, Stromberg-Carlson type 600, dwg. #603-40-2, slow release, contacts 1A, 1B (left) 1C, 1A (right) 3⅞" long x ⅞" wide x 1-19/32" high, (2) 8-32 mounting holes on end opposite armature. ½" center to center	Line	Stromberg-Carlson	Bendix dwg. C59157-2
816	2Z7699-24	RELAY: Single wound, 100 ohms, 24-volts, d.c., 1A, contacts, right side 1 make, Stromberg-Carlson type 500, dwg. No. 504-1-1, 3⅞" long (overall) x ⅞" wide x 1-19/32" high, 2 mounting holes for 8-32 tap spaced ½" apart center to center	Look out	Stromberg-Carlson	Bendix dwg. L73226-24
817	2Z7699-35	RELAY: Single winding, 200 ohms, 24-volts d.c., Stromberg-Carlson type 500, dwg. #505-2-1 contact 1B adjusted for pulsing, 3⅞" long x ⅞" wide x 1-19/32" high (2) mounting holes #8-32 tap ½" apart	Keying	Stromberg-Carlson	Bendix dwg. L73226-6
818	2Z7651-3	RELAY: D.P.S.T., Leach 1054T, normally open ¼" silver contacts, 24v, d.c.; time delay 20 seconds to 1 minute; 3¼" long x 2¾" wide x 1⅜" high; (8) mounting holes drilled to clear #8 screw	Time delay	Leach	Bendix dwg. A104570
819	3Z6003-13	RESISTOR: 30 ohms, 10 watts, Sprague "Koolohm" ±5%; fixed, wire wound; 1-27/32" long x 7/16" dia.	K7 Shunt	Sprague	Bendix dwg. A108573-300
820	3Z6005-32	RESISTOR: Fixed, wire wound, 50 ohms ±20%, 1 watt, International Resistor Co. BW-1, 1¼" long x ¼" dia., leads 1½" long	Spark suppressor	I.R.C.	Bendix dwg. A104131-11
821	3Z6022E5-1	RESISTOR: Fixed, 225 ohms; 10 watts, with a tap resistance of 75 ohms; Hardwick Hindle 1½-H2; 1½" long x ½" dia.	Lookout circuit	Hardwick Hindle	Bendix dwg. A104587-2
822	3Z6020-26	RESISTOR: Fixed, wire wound, 200 ohms ±20%, 2 watts, I.R.C. BW-2; 1¾" long x 5/16" dia. leads 1½" long	K1 lockup	I.R.C.	Bendix dwg. A104133-4
824	2Z7292-25	POTENTIOMETER: volume control, 25 ohms, linear taper, I.R.C. type PR-25, bushing ⅜-32 x ½"	Rotary switch series	I.R.C.	Bendix dwg. A104558-1

MODEL: RELAY UNIT BC-687-A

Reference Symbol	*Army Stock Number Navy Stock Number British Ref. Number*	*Name of Part and Description*	*Function*	*Mfr. and Desig. or AWS Type*	*Cont. or Govt. Dwg. or Spec. No.*
825	2Z6030-30	RESISTOR: Fixed, metallized, 300 ohms, ±20%, 1 watt; International type BT-1, bakelite insulation; 1¼" long x ¼" dia., leads 1½" long	Receiver amp. input	I.R.C.	Bendix dwg. A104131-13
826-1	3Z6022E5	RESISTOR: Fixed; wire wound; 225 ohms ±20%, 1 watt; International type BW-1; 1¼" long x ¼" dia., leads 1½" long	Code amp. cathode	I.R.C.	Bendix dwg. A104131-7
826-2	3Z6022E5	Same as 826-1	Rec. amp. cathode	I.R.C.	Bendix dwg. A104131-7
827	2Z7296-100-M:	POTENTIOMETER: Volume control, 100,000 ohms ±20%, Allen-Bradley type J, logarithmic taper 9/16" long x 1 1/16" dia. mounting shaft 3/8-32 x ¼" long with lock washer and nut; knob shaft 7/16" long x ¼" dia. with flat	Rec. amp. gain control	Allen-Bradley	Bendix dwg. A104128-3
828-1	3Z6650-54	RESISTOR: Fixed; metallized; 50,000 ohms ±20%, 1 watt; I.R.C. type BT-1; 1¼" long x ¼" dia., leads 1½" long	700-cycle osc. grid	I.R.C.	Bendix dwg. A104131-8
828-2	3Z6650-54	Same as 828-1	450-cycle osc. grid	I.R.C.	Bendix dwg. A104131-8
829	3Z6610-63 3RC31BE103M	RESISTOR: Fixed; metallized; 10,000 ohms ±20%, 1 watt; I.R.C., BT-1 insulated; 1¼" long x ¼" dia., leads 1½" long	Code amp grid	I.R.C.	Bendix dwg. A104131-9
830	3Z6625-29	RESISTOR: Fixed; metallized; 25,000 ohms ±20%, 1 watt, I.R.C. type BT-1, 1¼" long x ¼" dia. leads 1½" long	Rec. amp. grid filter	I.R.C.	Bendix dwg. A104131-14
831	3Z6560-9	RESISTOR: Fixed; metallized; 6000 ohms ±20%, 1 watt, I.R.C. type BT-1; 1¼" long x ¼" dia. leads 1½" long	Rec. amp. input	I.R.C.	Bendix dwg. A104131-15
832	3Z6720-13 3RCBE184K	RESISTOR: Fixed, metallized, 200,000 ohms ±20%, ½ watt; I.R.C. BT-½; 5/8" long x 3/16" dia., leads 1½" long	Code amp.	I.R.C.	Bendix dwg. A104132-11
833	3Z9825-26	SWITCH: Rotary; S.P., 4-position; Oak Mfg. type H; 6 terminals; shaft 1 7/8" long with 3/8" flat	Channel selector	Oak	Bendix dwg. A104165

834A	4C5067C	KEY: Switchboard, pushbutton, Stromberg-Carlson #SK-3407-C, 3½" long x 1⅛" high x 19/32" wide, contacts 2 form C	Speed check	Stromberg-Carlson	Bendix dwg. A106287
834B	4C5067C	Same as 834A	Speed check	Stromberg-Carlson	Bendix dwg. A106287
835	3Z9825-27	SWITCH: Rotary, 50-point; 2-level; Automatic Electric Co. wipers; 18 interrupter springs; coil 12-volts, 9.4 ohms	Stepping switch	Automatic Electric	Bendix dwg. L73130-2
836-1	2Z10000-40	TRANSFORMER: output, 3000 ohms to 600 ohms, level 6DB ±1DB, 100 to 4000 cycles, turns ratio P. to S. 2.23; tolerance. 1500v r.m.s., 60 cycle test; 2⅝" x 1 7/16" x 1⅞" mounting holes tapped for 6-32 thread., ¼" deep, 1⅜" and 1" apart center to center, 4 terminals	Code amplifier output	Bendix	Bendix dwg. A103040
836-2	2Z10000-40	Same as 836-1	Rec. amplifier output	Bendix	Bendix dwg. A103040
837	2Z9713.1	TRANSFORMER: audio, pri. 600 ohms, sec. 100,000 ohms; power plus 6DB; turns ratio 1-13 resistance 20°C, pri. 16.4, sec. 2700, 4 term. 1000 v.r.m.s., 60-cycle test; 1⅞" long x 1 7/16" wide x 2⅞" high, 4-6-32 mounting holes tapped ¼" deep, 1⅜" apart and 1" apart center to center	Rec. amplifier input	Bendix	Bendix dwg. A103046
838-1	2Z9632.3	REACTOR: Transformer, output, 450 and 700 cycles; plate winding (1-2-3-4) 0.263 H; tapped 0.238 H; and 0.25 H; Q of 20; turns ratio; plate winding (1-4) to grid winding (5-6) 6.8-1; can base 2" long x 2" wide x 2⅞" high; 4-6-32 thread mountings spaced 1½" apart center to center	450-cycle osc.	Bendix	Bendix dwg. A103048
838-2	2Z9632.3	Same as 838-1	700-cycle osc.	Bendix	Bendix dwg. A103048
839-1	2Z8795.2	SOCKET: Tube, 8-contact; Amphenol type SS8M with #4 retainer ring; 1 5/16" dia., 1¼" dia. lip	Rec. amplifier socket	Amphenol	Bendix dwg. A104624-1
839-2	2Z8795.2	Same as 839-1	450-cycle osc. socket	Amphenol	Bendix dwg. A104624-1
839-3	2Z8795.2	Same as 839-1	700-cycle osc. code	Amphenol	Bendix dwg. A104624-1
839-4	2Z8795.2	Same as 839-1	Amplifier socket code	Amphenol	Bendix dwg. A104624-1

Reference Symbol	*Army Stock Number Navy Stock Number British Ref. Number*	*Name of Part and Description*	*Function*	*Mfr. and Desig. or AWS Type*	*Cont. or Govt. Dwg. or Spec. No.*
840	3Z6715-25	RESISTOR: Fixed, metallized, 150,000 ohms, ±20%, ½ watt, I.R.C. BT-½; 5/8" long x 3/16", dia. leads 1½" long.	Amplifier coupling	I.R.C.	Bendix dwg. A104132-15
841	4C5424.4	LAMP: Switchboard, 24 volts, 0.035 to 0.050 ampere; Stromberg-Carlson #24-B-2.	Pilot light	Stromberg-Carlson	Bendix dwg. A106879
842-1	3DB1.30	CAPACITOR: Oil filled, paper, 1 mfd. ±5%, 200 v.d.c.w., Aerovox type 30 2 1/16" long x 1-13/16" wide x 15/16" high, terminals extend 15/32" from front side, 2 3/16" dia. mounting holes spaced 2 7/16" apart center to center on mounting lugs 2-13/16" long	550-cycle H.P. filter	Aerovox	Bendix dwg. A107844
842-2	3DB1.30	Same as 842-1	500-cycle H.P. filter	Aerovox	Bendix dwg A107844
842-3	3DB1.30	Same as 842-1	500-cycle H.P. filter	Aerovox	Bendix dwg. A107844
843	3C546	COIL: Filter, inductor, 0.125 henry ±5%, Q of 20, 450 cycles, 1000 v.r.m.s., 60-cycle test; 2" square, x 2 7/8" high, 4 mounting holes 1½" apart center to center	550-cycle H.P. filter	Bendix	Bendix dwg. A103096
844-1	3Z6100-73 3RC21BE102M	RESISTOR: Fixed; metallized; 1000 ohms ±20%, ½ watt; I.R.C. type BT-½; 5/8" long x 3/16" dia., leads 1½" long	H.P. filter shunt	I.R.C.	Bendix dwg. A104132-6
844-2	3Z6100-73 3RC21BE102M	Same as 844-1	H.P. filter shunt	I.R.C.	Bendix dwg. A104132-6
VT-201-C		TUBE: Beam power tetrode, VT-201-C, type 25L6	Rec. amplifier	R.C.A	
VT-201-C		TUBE: Beam power tetrode, VT-201-C, type 25L6	450-cycle osc.	R.C.A.	
VT-201-C		TUBE: Beam power tetrode, VT-201-C, type 25L6	700-cycle osc.	R.C.A.	
VT-201-C		TUBE: Beam power tetrode, VT-201-C, type 25L6	Code amp. tube	R.C.A.	
	2Z5822-8	KNOB: Bakelite, Kurz-Kasch #S308-64; 1 1/8" dia. x ¾" thick, ¼" hole, for shaft; set screw mounting.	Rec. amp. gain control	Kurz-Kasch	Bendix dwg. A8153
	2Z5822-6	KNOB AND POINTER ASSEMBLY: Kurz-Kasch #S-308-64; set screw 180° from pointer.	Channel selector switch	Kurz-Kasch	Bendix dwg. A103856-1

SECTION VII

DRAWINGS

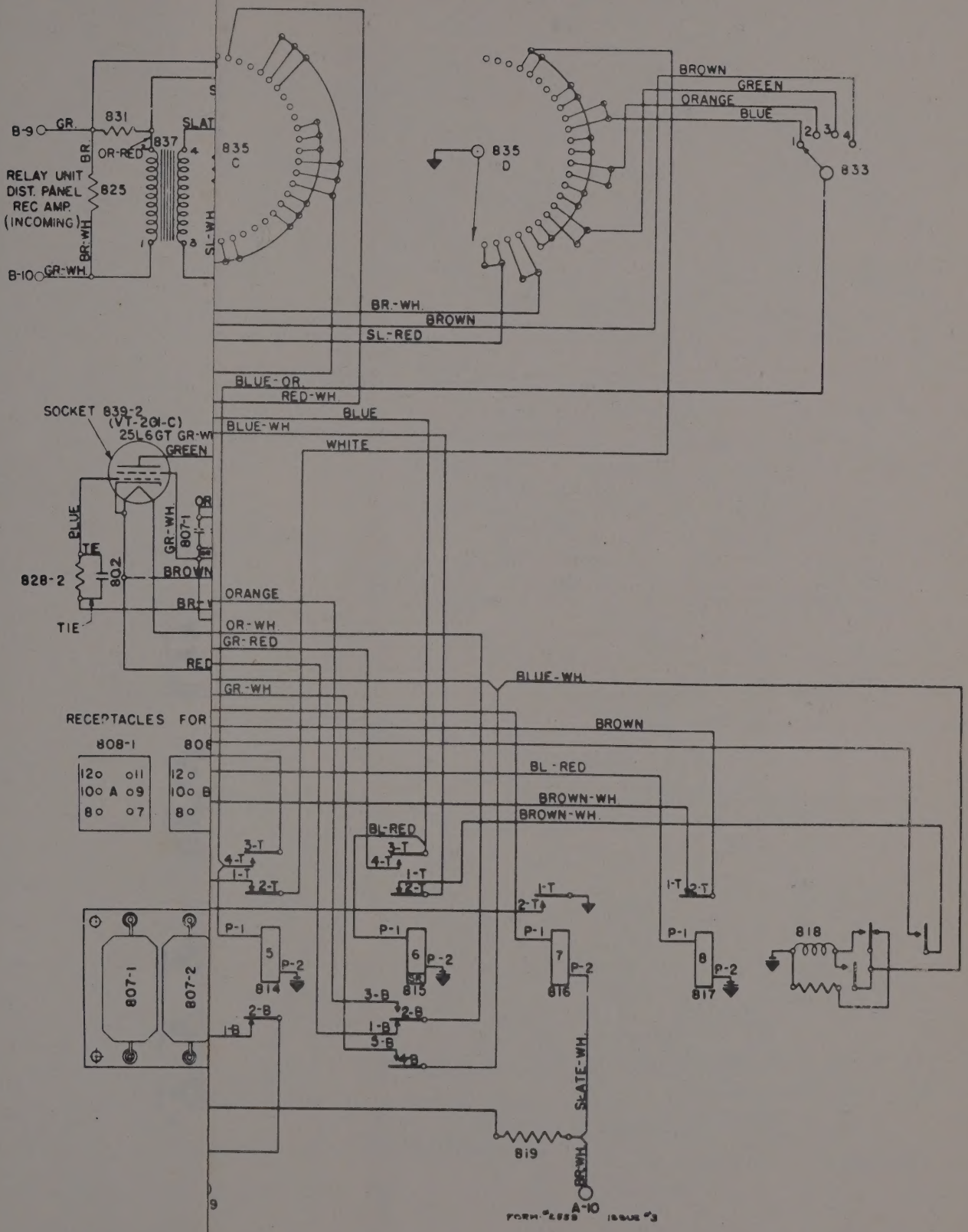

Figure 18 — Relay Unit BC-687-A, Circuit Diagram

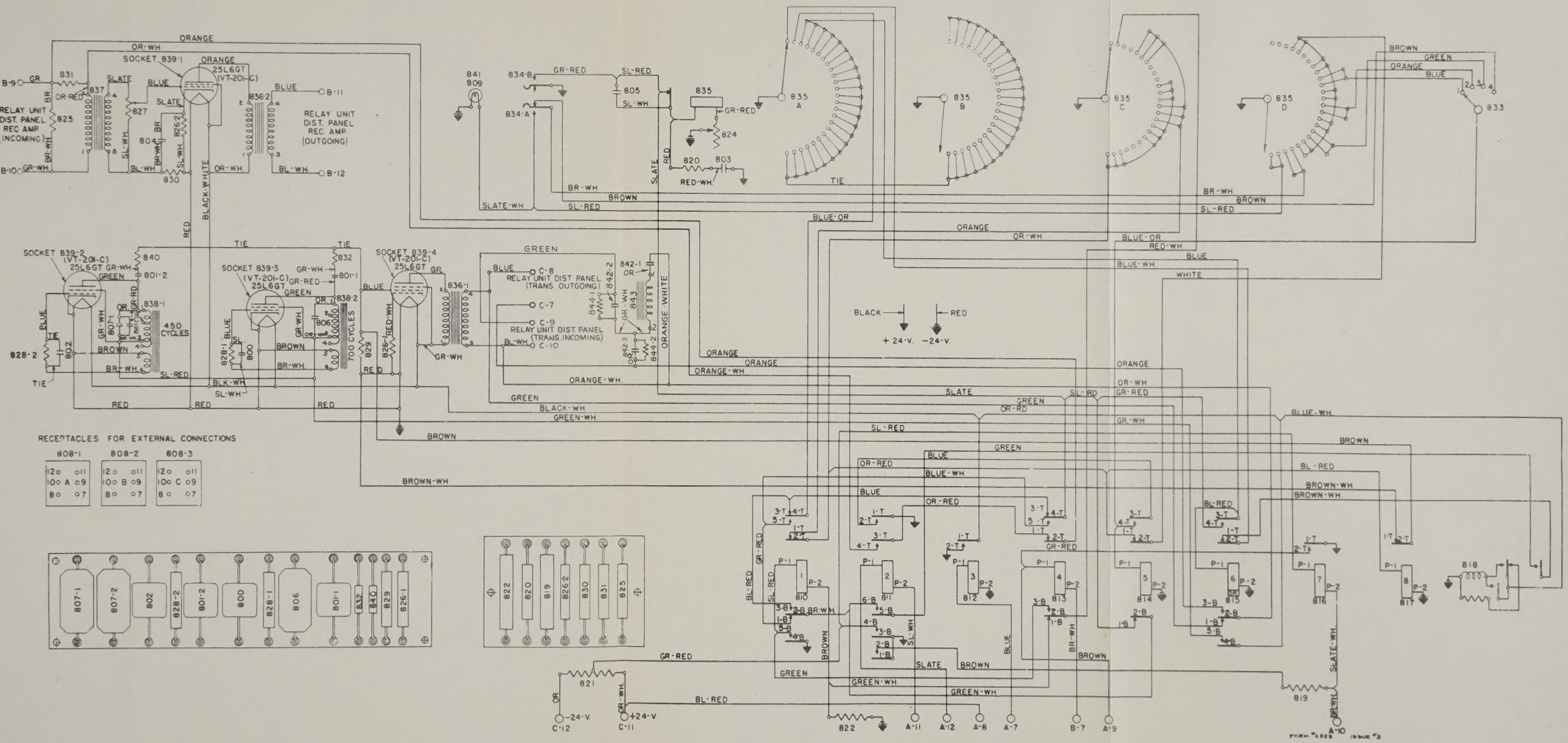

Figure 18 — Relay Unit BC-687-A, Circuit Diagram

AN 08-40BC687-2

AN 08-40BC687-2

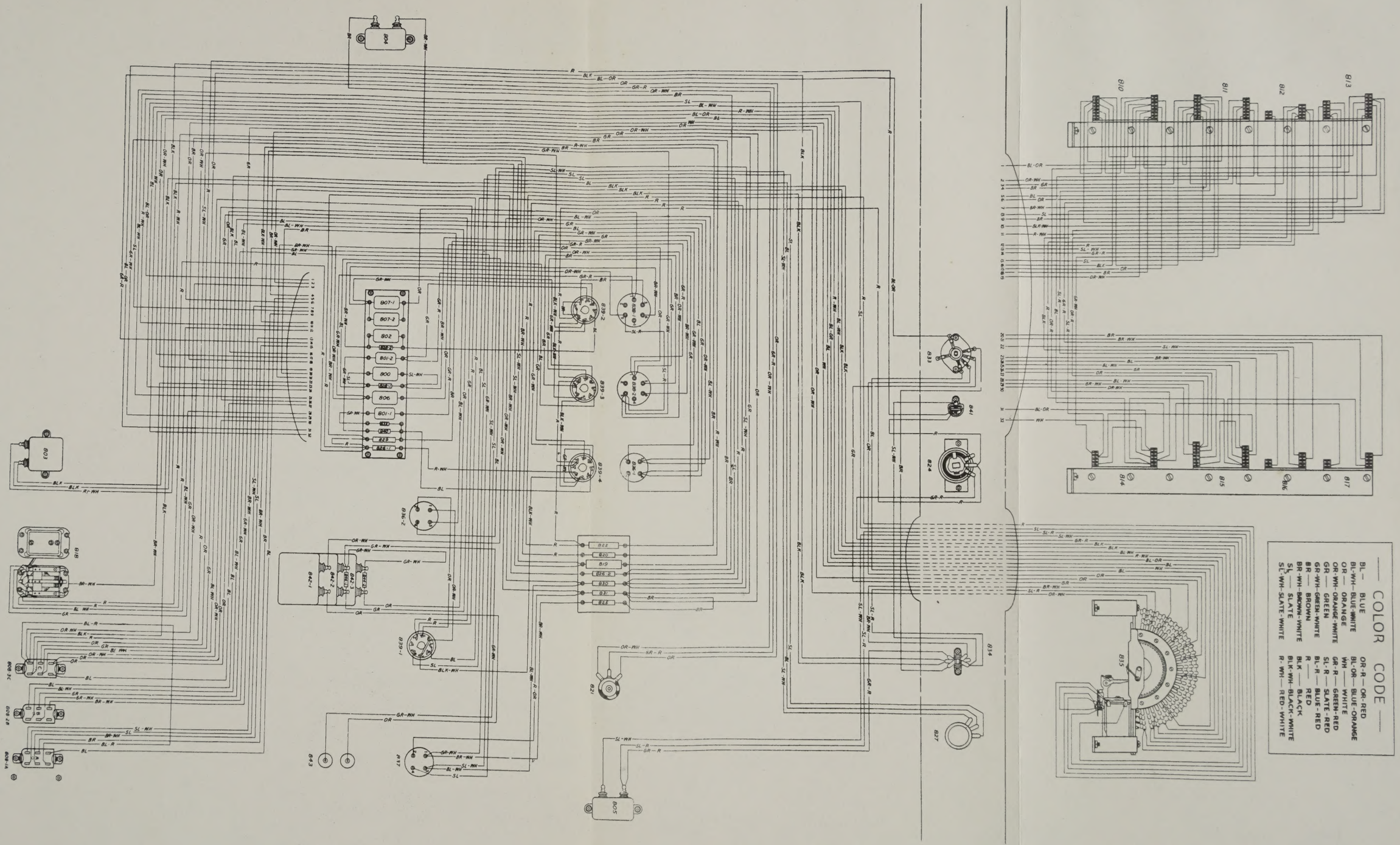
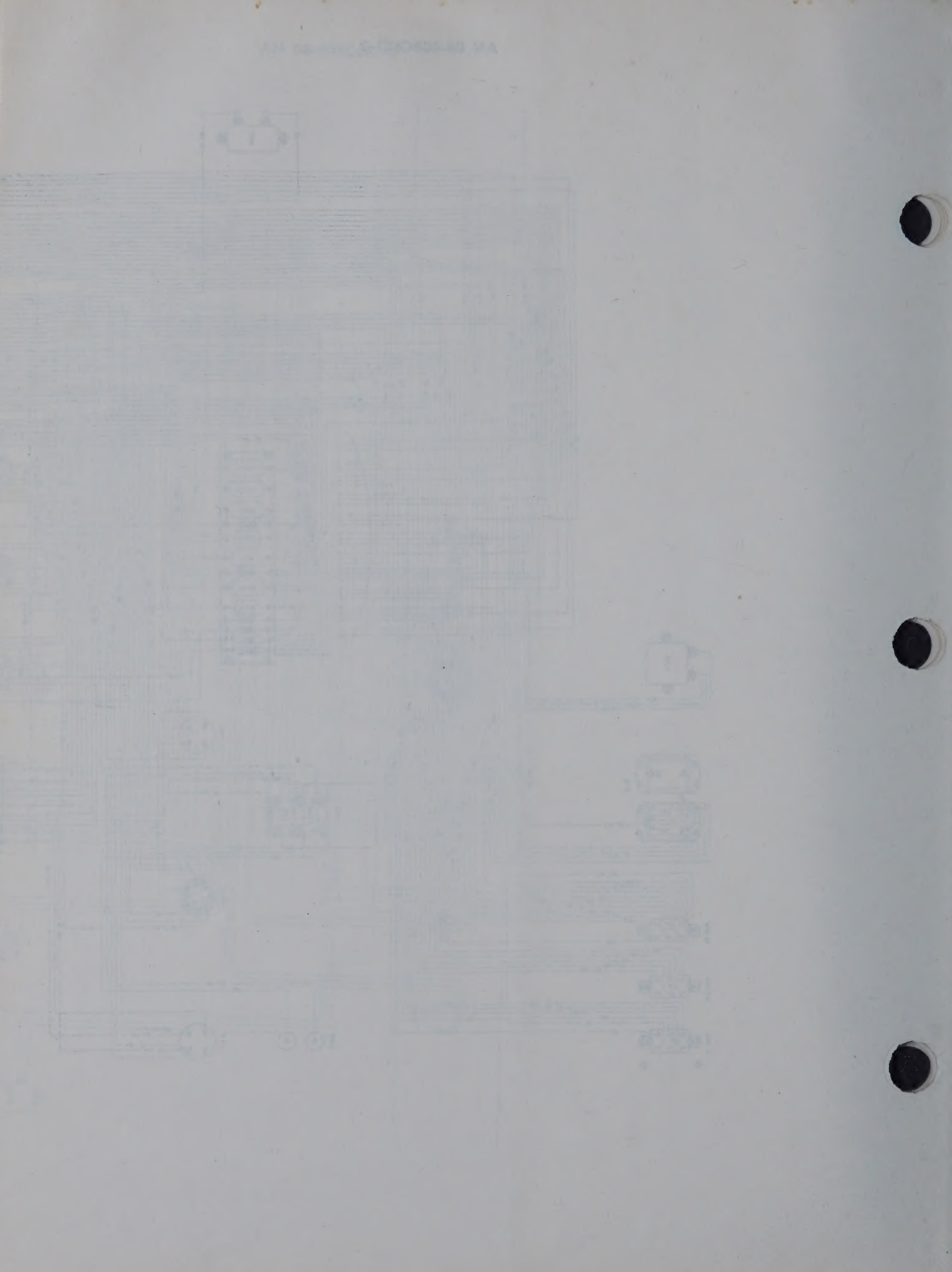
Figure 19 — Relay Unit BC-687-A, Pictorial Wiring Diagram